TOP TECHNIQUES for Flawless-Fitting Drawers

Woodsmith®

www.woodsmith.com

Vol. 28 / No. 168

Build a Craftsman's TOOL CHEST

- Built-in Door Storage Options
- 11 Soft, Leather-lined Drawers
- Easy Jewelry Chest Conversion

Inside:

Rout Perfect Plywood Panels — No Tear-Out Guaranteed

5 Simple Small Shop Solutions

From Thick to Thin — Shop-Tested Resaw Tips

A Publication of August Home Publishing

Table of Contents

from our readers
Tips & Techniques 4

all about
Woodworking Chisels 8
Every shop needs a good set of chisels. Here's a look at what's available and what to look for.

tools of the trade
Safety Glasses 10
Eye protection is a must in the shop. Learn what you need to know to make the right decision.

techniques from our shop
ONLINE EXTRA video workshop
Perfect Plywood Edges 12
Find out how to get straight, square plywood panels with a hand-held router.

jigs and fixtures
ProMiter-100 14
Digital accuracy in a miter gauge? With this technology, there's no guesswork at all.

woodworking technique
Inlaying with Epoxy 28
Dress up any project with an easy-to-apply inlay made from tinted epoxy.

projects

weekend project
Desktop Message Center. 16
With this compact unit, you'll have everything you need for making calls, paying bills, or taking messages right at hand.

designer series project
Curved-Leg End Table 22
The sleek curve of each leg is what catches your eye. But it's the technique for bending the legs that will make you want to build this project.

heirloom project
Woodsmith GO ONLINE EXTRAS
Craftsman's Tool Chest. 32
This chest features figured hardwood, beaded frame and panel construction, and solid brass hardware. It's the ideal home for all your prized hand tools.
DESIGNER'S NOTEBOOK

Desktop Message Center page 16

Curved-Leg Table page 22

tips from our shop
Shop Notebook 30

working with tools
Resawing Tips & Techniques 42
Use your band saw to make your own veneers or thin stock. Here's how to do it right.

small shop solutions
5 Power Tool Storage Solutions . . .44
Storing power tools can be a challenge. Here are a few ideas to put to use in your shop.

finishing room
Bleaching Wood. 46
Need to remove a stain or even out the color of a project? Wood bleaching is a valuable technique.

in the mailbox
Q & A 48

hardware and supplies
Sources 49

details of craftsmanship
Flawless Fitting Drawers. 50
How do you get a drawer to fit just right? These tips and techniques provide the answer.

Craftsman's Tool Chest page 32

editor's note

Sawdust

"Why are woodworkers so fascinated with building beautiful boxes for their tools?" That's the question I got from a friend (who isn't a woodworker) when they saw the Craftsman's Tool Chest featured on the cover. And I have to admit the question stumped me a bit at first. For me, as a woodworker, tool chests have such a strong, natural appeal, I never really thought about why.

After thinking about it for a while, I came to a couple of conclusions. I think part of the reason we enjoy building toolboxes has to do with tradition. Woodworkers have always treasured the tools they work with so it makes sense to us to build something nice to store and organize them.

The other thing is, once most projects are completed they leave the shop. They end up in the house or are given away. But a tool chest stays close by, where we get to appreciate the work and the craftsmanship that goes into it. Of course, tools aren't the only treasures this chest can hold. You can easily make someone else happy by building it as a jewelry chest and sending it on its way.

Terry

ONLINE EXTRA video workshop

Woodsmith GO ONLINE EXTRAS

These two symbols let you know there's more information online at www.Woodsmith.com. There you'll see step-by-step videos, technique and project animation, bonus cutting diagrams, and a lot more.

STATEMENT OF OWNERSHIP, MANAGEMENT, AND CIRCULATION
(Required by 39 U.S.C. 3685)

1. Publication Title: *Woodsmith*. 2. Publication No.: 0164-4114 3. Filing Date: September 29, 2006. 4. Issue Frequency: Bimonthly. 5. No. of issues published annually: 6 (six). 6. Annual subscription price: $24.95. 7. Complete mailing address of known office of publication: 2200 Grand Avenue, Des Moines, (Polk County), Iowa 50312-5306. 8. Complete mailing address of the headquarters or general business offices of the publisher: 2200 Grand Avenue, Des Moines, (Polk County), Iowa 50312-5306. 9. Full names and complete mailing addresses of publisher, editor, and managing editor: Publisher: Donald B. Peschke, 2200 Grand Avenue, Des Moines, Iowa 50312; Editor: Terry J. Strohman, 2200 Grand Avenue, Des Moines, Iowa 50312. 10. Owner: August Home Publishing Company, 2200 Grand Avenue, Des Moines, Iowa 50312; Donald B. Peschke, 2200 Grand Avenue, Des Moines, Iowa 50312. 11. Known bondholders, mortgagees, and other security holders owning 1 percent or more of total amount of bonds, mortgages or other securities: None. 12. (Does not apply.) 13. Publication Title: Woodsmith. 14. Issue Date for Circulation Data Below: August/September 2006 15. Extent and nature of circulation:

	Average no. copies each issue during preceding 12 months	Average no. copies of single issue published nearest to filing date
A. Total number of copies (net press run)	313,909	313,756
B. Paid and/or requested circulation:		
1. Paid/requested outside-county mail subscriptions stated on Form 3541	248,676	241,709
2. Paid in-county subscriptions	0	0
3. Sales through dealers and carriers, street vendors, counter sales, and other non USPS paid distribution	22,633	25,008
4. Other classes mailed through the USPS	0	0
C. Total paid and/or requested circulation	271,309	266,717
D. Free distribution by mail, samples, complimentary, and other free copies		
1. Outside-county as stated on Form 3541	85	102
2. In-county as stated on Form 3541	0	0
3. Other classes mailed through the USPS	0	0
E. Free distribution outside the mail (carriers or other means)	0	0
F. Total free distribution	85	102
G. Total distribution	271,394	266,819
H. Copies not distributed	42,515	46,937
I. Total	313,909	313,756
J. Percentage Paid and/or requested circulation	99.97%	99.96%

16. Publication of Statement of Ownership. Will be printed in the Dec. 2006 (#168) issue of this publication.

On occasion, we allow companies whose products and services may be of interest to you to send advertising mail to our subscribers. We are careful to choose ethical companies that have information of genuine interest to our subscribers. Most of our subscribers appreciate these materials. However, if you prefer to have your name deleted from the mailing list made available to other companies, please write to us at Woodsmith, 2200 Grand Avenue, Des Moines, IA 50312

Tips & Techniques

Finishing Turntable

Applying finish to a large project in my small shop was always a challenge. It took some creative maneuvering around my workbench and tools to find the space I needed. That is, until I built the turntable you see pictured on the right.

What makes this turntable so valuable in my shop is that the top rotates 360°. So, when I'm finishing a project, I don't have to keep moving around to reach every side. I just spin the top as needed.

As the illustrations below show, two identical pieces of plywood make up the base and the top. The base piece holds a pipe flange and a length of black pipe that form the center pivot. The pipe fits into a hole in the center of the top to keep the top from rolling off the base while I'm applying stain or finish.

Sandwiched between the base and the top are six casters. They allow the top to rotate, as well as provide balance and support for it. An added bonus of attaching the casters to the top is that I can lift it off the base and use it as a dolly to move heavy objects.

Now, applying finish to a large project is not as difficult nor space-consuming as it once was. And when I'm finished, I can simply lean it up against my shop wall to get it out of the way.

Boris Bosnjak
Toronto, Ontario, Canada

EXPLODED VIEW

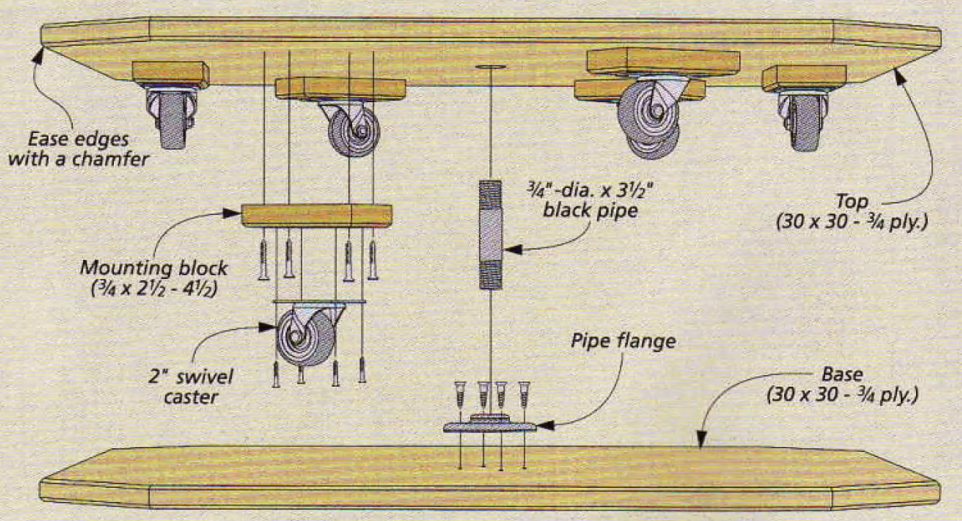

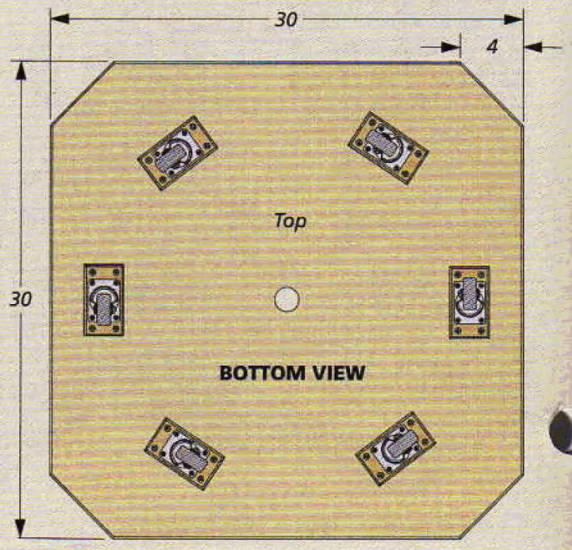

Checking Diagonals

Comparing the diagonals of a cabinet or drawer is a great way to check it for square. But measuring long diagonals can be difficult. To give me a hand, I made a pair of simple tape holders like you see in the photo at right.

Each holder is a scrap of plywood with two sides covered with hardboard to "hook" over a corner (Exploded View below right). Then to hold the tape and allow for an accurate reading, the corner is mitered to form a slot that fits the blade (Top View detail).

R. B. Himes
Vienna, Ohio

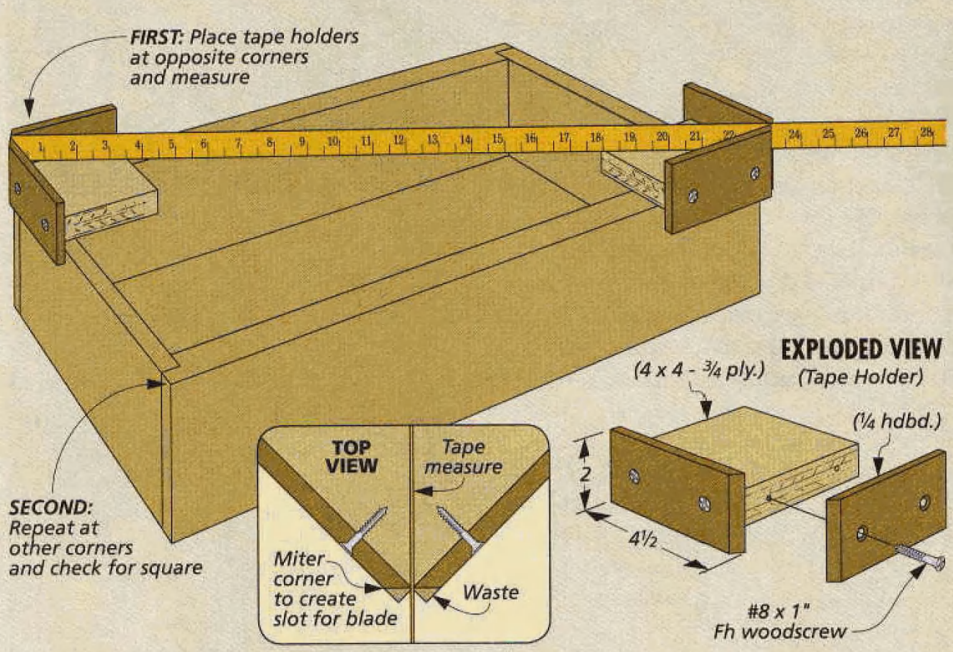

FREE TIPS BY EMAIL

Now, you can have the best, time-saving secrets, solutions, and techniques sent directly to your computer. Just go to **www.woodsmith.com** and click on ***"FREE Tips by Email"*** to sign up. You'll receive a new tip by email each week.

SUBMIT YOUR TIPS

If you have an original shop tip, we would like to hear from you and consider publishing your tip in one or more of our publications. Just write down your tip and mail it to: *Woodsmith,* Tips and Techniques, 2200 Grand Avenue, Des Moines, Iowa 50312. Please include your name, address, and daytime phone number in case we have any questions. If you would like, FAX it to us at 515-282-6741 or send us an email message at: woodsmith@woodsmith.com. We will pay up to $200 if we publish your tip.

Woodsmith

No. 168 December/January 2006

PUBLISHER Donald B. Peschke

EDITOR Terry J. Strohman

MANAGING EDITOR Vincent Ancona
CONTRIBUTING EDITOR Bryan Nelson
ASSOCIATE EDITORS Phil Huber, Ted Raife
ASSISTANT EDITORS Ron Johnson, Mitch Holmes, Randall A. Maxey, Dennis Perkins

EXECUTIVE ART DIRECTOR Todd Lambirth
SENIOR ILLUSTRATORS David Kreyling, Dirk Ver Steeg, Harlan V. Clark
ILLUSTRATORS David Kallemyn, Peter J. Larson

CREATIVE DIRECTOR Ted Kralicek

SENIOR PROJECT DESIGNERS Ken Munkel, Kent Welsh, Chris Fitch, Jim Downing
PROJECT DESIGNERS/BUILDERS Mike Donovan, John Doyle
SHOP CRAFTSMEN Steve Curtis, Steve Johnson
SR. PHOTOGRAPHERS Crayola England, Dennis Kennedy
ASSOCIATE STYLE DIRECTOR Rebecca Cunningham
ELECTRONIC IMAGE SPECIALIST Allan Ruhnke
VIDEOGRAPHERS Craig Ruegsegger, Mark Hayes

Woodsmith® (ISSN 0164-4114) is published bimonthly (Feb., Apr., June, Aug., Oct., Dec.) by August Home Publishing Company, 2200 Grand Ave, Des Moines, IA 50312.

Woodsmith® is a registered trademark of August Home Publishing.
Copyright© 2006 August Home Publishing Company. All rights reserved.

Subscriptions: Single copy: $4.95. One year subscription (6 issues), $24.95. (Canada/International add $10 per year, U.S. funds.)
Canadian Subscriptions: Canada Post Agreement No. 40038201. Send change of address information to PO Box 881, Station Main, Markham, ON L3P 8M6. Canada BN 84597 5473 RT
Periodicals Postage Paid at Des Moines, IA and at additional offices.
Postmaster: Send change of address to *Woodsmith*, Box 37112, Boone, IA 50037-2112.
Subscription Questions? Write to *Woodsmith*, P.O. Box 842, Des Moines, IA 50304 or call 1-800-333-5075, 8:00 am to 5:00 pm, Central Time, weekdays. Or send an email to: orders@woodsmith.com
Email: woodsmith@woodsmith.com
World Wide Web: http://www.Woodsmith.com

www.Woodsmith.com

ONLINE SUBSCRIBER SERVICES

- **ACCESS** your account
- **CHECK** on a subscription payment
- **TELL US** if you've missed an issue
- **CHANGE** your mailing or e-mail address
- **RENEW** your subscription
- **PAY** your bill

Click on "Subscriber Services" in the list on the left side of our home page. Menus and forms will take you through any of the account-maintenance services you need.

HOW TO REACH US:

FOR SUBSCRIPTIONS, ADDRESS CHANGES OR QUESTIONS, WRITE OR CALL:
Customer Service
2200 Grand Ave., Des Moines, IA 50312
800-333-5075 8 a.m. to 5 p.m. CT

OR VISIT OUR WEB SITE:
www.Woodsmith.com

AUGUST HOME PUBLISHING COMPANY

Printed in U.S.A.

Finishing Easel

Finishing doors and other flat assemblies can be tiring on my back. To hold the workpieces at a comfortable height, I build the adjustable easel you see at right.

As the drawing below shows, the main parts of the easel are a pair of uprights made from "two-by" stock that are set up on a sawhorse. A square notch in the bottom of each upright fits over a stretcher screwed to the legs of the sawhorse (detail 'b'). And an angled notch in the back edge of the uprights determines the slope of the easel.

To keep the uprights steady, I drilled two holes in each one to hold a pair of long dowels. The dowels are fixed to one upright with screws. The other upright is free to slide to adjust for panels of different widths.

The workpiece rests on smaller dowels inserted in the front edge of each upright. And a length of PVC pipe that's cut in half lengthwise and screwed to the upright raises the workpiece off the uprights (detail 'a'). This prevents the project from sticking to the easel.

Allan Gabel
Sussex, Wisconsin

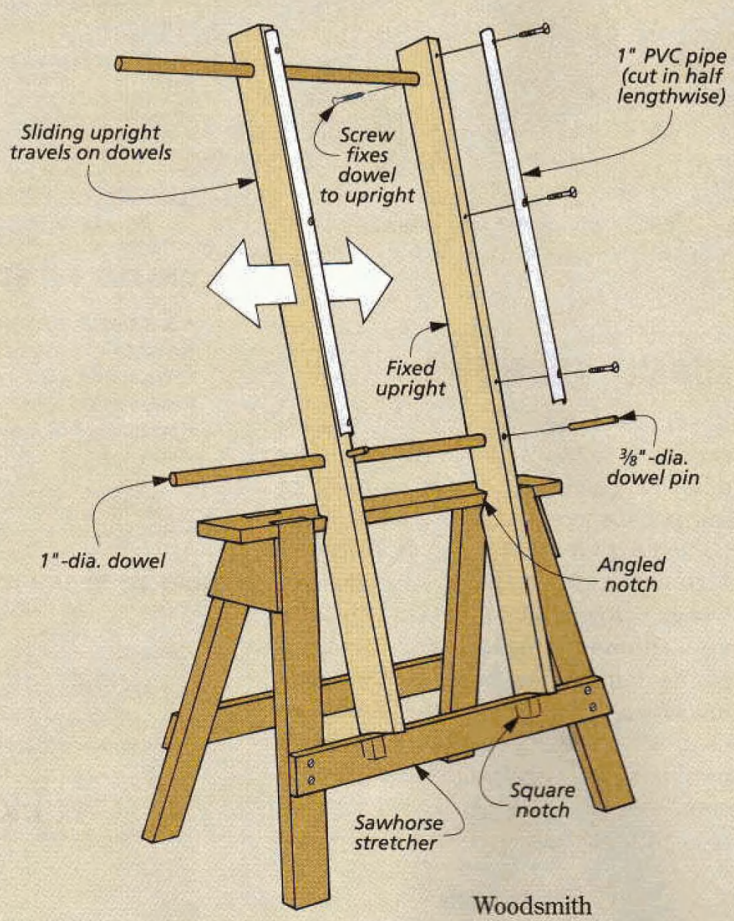

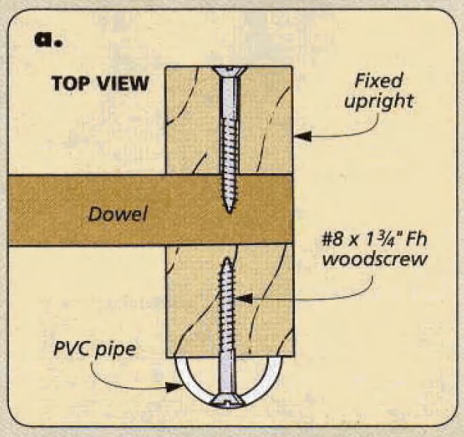

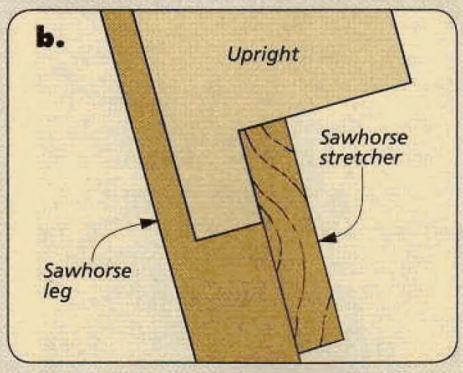

Duct Tape Drawer Pull

Fitting drawers for a project has always been a challenge for me. I use a lot of trial and error (taking the drawers in and out of their openings many times) before I'm satisfied with how they fit in the case.

The problem is that I don't like to install the pulls until I'm sure the drawer fit is exactly right. That way I can put the pulls right where they need to go. But removing a drawer without a pull can be somewhat difficult without damaging it.

So, when fitting drawers, I use small pieces of duct tape as a temporary pull to make opening the drawers easier.

Ken Munkel
Des Moines, Iowa

Handy Wedge

There are times when you need a helping hand while you're working in your shop. And often that help can be as simple as the slotted wedge you see pictured here.

I've found the wedge comes in handy when pulling brads and nails. The slot down the middle gives you better leverage — and protects the workpiece — when using a hammer to remove them.

The wedge also comes in handy when you need to gently pry project parts apart during test-fittings or when wrong parts are accidentally glued together. In addition, the 90° angle of the wedge can be used to quickly square up adjoining parts.

The wedge is made of hardwood, so it will hold up to use and abuse. And it's built out of 1¾" stock for more stability.

Michael Dombrowski
Saint Jo, Texas

Quick Tips

"FISHING" FOR SMALL PARTS

Dropping small hardware parts onto my shop floor can be aggravating. They disappear into a pile of sawdust or roll into a hard-to-reach corner of my shop.

To help me "snag" them easily, I attach a rare-earth magnet to the end of a steel tape measure. The tape can be adjusted to any length needed and is flexible enough to get into those awkward places.

"Fish" with the magnet-baited tape until the stray item attaches itself to the magnet. Then just push the release button and you have your wayward part in hand.

John Premo
Western Springs, Illinois

SWITCH LOCATOR

The fence rail of my new table saw hides the exact location of the saw's on-off switch. Even with its large "paddle" style switch, I still can't see it and often wind up fumbling around for a few seconds until I find it. In an emergency, that could prove to be quite dangerous.

To help me find the switch quicker, I simply drew an arrow on the fence rail above the switch. I used a permanent marker so the markings wouldn't rub out.

This simple trick will save precious seconds if I need to shut my saw down quickly.

Serge Duclos
Delson, Quebec, Canada

Win This Porter-Cable Variable Speed Router

That's right, send us your shop tips. If your tip or technique is selected as the featured reader's tip, you'll win a *Porter-Cable* variable speed router just like the one shown here. Send your tips and techniques to: *Woodsmith*, Tips and Techniques, 2200 Grand Avenue, Des Moines, Iowa 50312. Or send us an email message at: woodsmith@woodsmith.com.

The Winner!

Congratulations to Boris Bosnjak of Toronto, Ontario, Canada. His finishing turntable was selected to win the *Porter-Cable* router. The turntable allows him to apply stain or finish to large projects easily in his small shop.

To find out how you could win a *Porter-Cable* variable speed router, check out the information on the left.

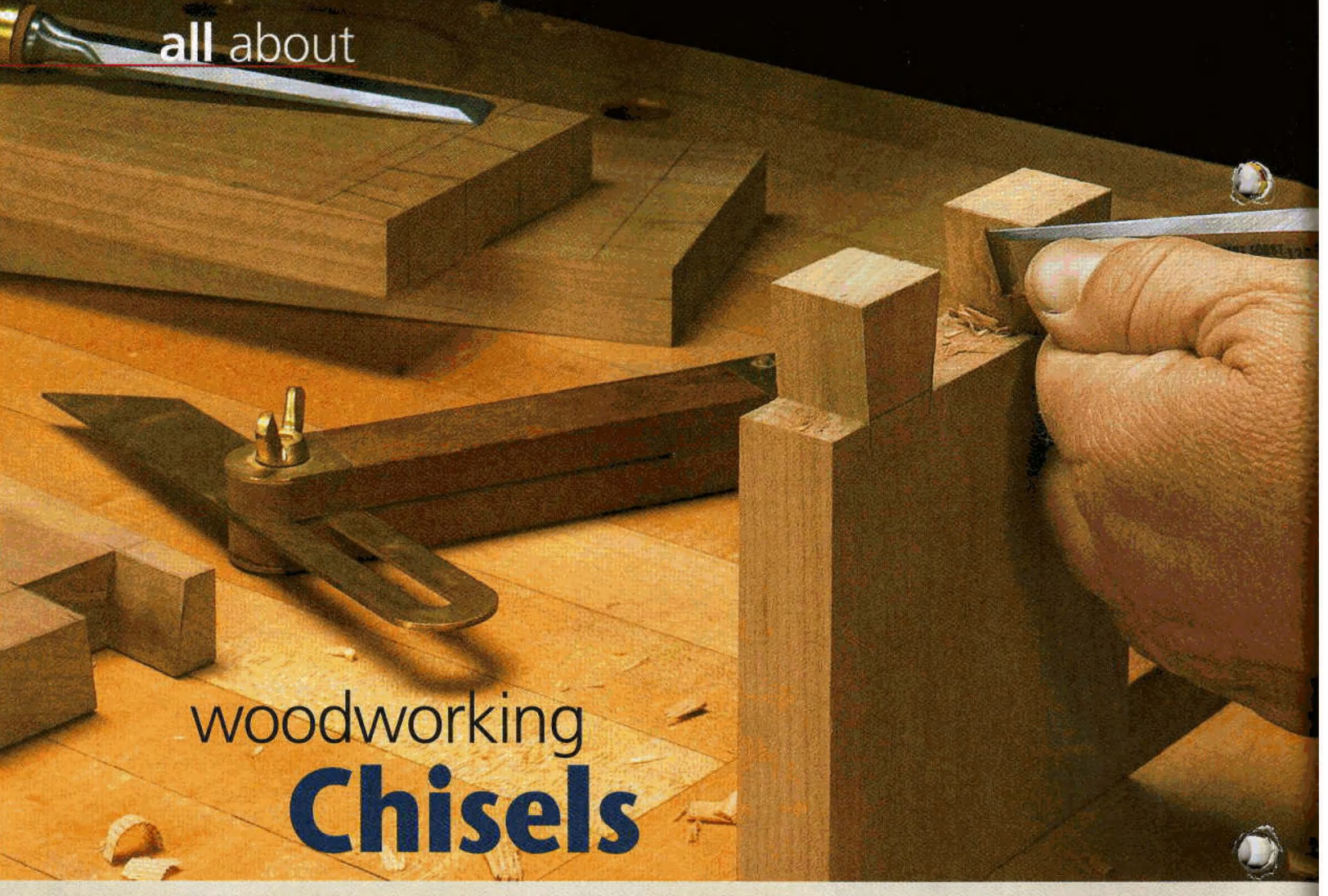

woodworking Chisels

Chisels are such a simple tool that it's easy to take them for granted. So here's a closer look at this essential hand tool.

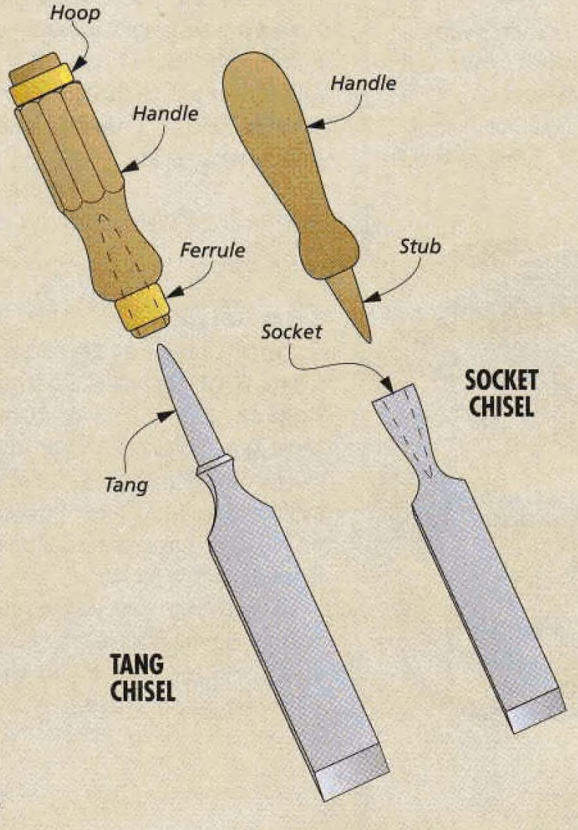

There's nothing quite like the feel of using a freshly honed chisel to slice a paper-thin shaving off the cheek of a tenon or the side of a dovetail. It's something that even a die-hard power tool user can appreciate. And while chisels are about as simple as woodworking tools get, there's more to them than meets the eye.

CONSTRUCTION

One of the distinguishing characteristics of a chisel is the way in which the blade is attached to the handle. There are two basic styles — socket chisels and tang chisels (drawing at left). A socket chisel has a hollow, tapered opening (socket) forged on the end. (It looks kind of like an ice cream cone.) The end of the handle (the stub) is tapered to match this socket.

Tang chisels are basically the reverse design. Here the stub (tang) is forged onto the blade and fits inside a hole bored in the handle.

A socket chisel is a little more suited to striking with a mallet, because the socket prevents the handle from splitting. This design also means it's more costly to make,

While it's hard to beat a wood handle for comfort, polypropylene is tough and long-lasting.

so socket chisels aren't as readily available as tang chisels.

LENGTH. One thing you'll quickly notice when you start comparing chisels is that they range considerably in both length and width.

Longer chisels are great for paring or shaving off small amounts of wood. Their extra length allows you to use them in a two-handed fashion, giving you a little more control when pushing them by hand. They also offer a little more reach when cleaning out a mortise or a recess.

Shorter chisels are referred to as butt chisels (photo below). A butt chisel is a little easier to control when striking it with a mallet, especially if you are trying to hold the chisel upright. And it's a handy size to carry to a jobsite.

SIZES. Chisels are available in widths ranging from ⅛" all the way up to 2". But you don't necessarily have to have every width available. I find that a set of ¼", ½", ¾", and 1" chisels will handle most shop tasks.

HANDLES. One of the most important things to consider when selecting a chisel is the handle. You'll find traditional wood handles (still preferred by many woodworkers), as well as polypropylene and composite handles.

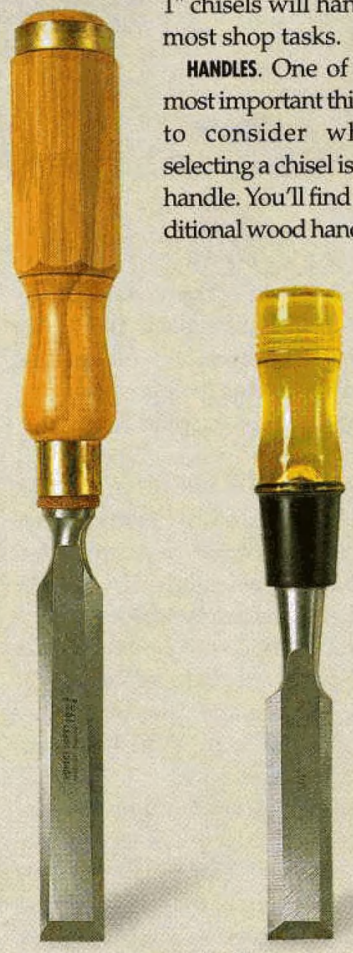

▲ Bench chisels (left) are typically 10" to 13" in length. Butt chisels are usually 9" or less.

On the subject of handles, there's one other thing you'll notice. Some chisels may have metal rings (a hoop or ferrule) at the ends of the handle. This allows the chisel to stand up to repeated heavy blows with a mallet without having to worry about splitting the handle.

BENCH CHISELS

While there are many different types of chisels, the ones you're most likely to see in a woodworking shop are called bench chisels. But all bench chisels aren't the same. For general woodworking tasks, there are three main types of bench chisels — firmer chisels, bevel-edged chisels, and mortise chisels (photos at right).

FIRMER. At one time, every woodworker had a set of firmer chisels. This style of chisel works great as an all-around woodworking chisel. The blade is moderately thick and it has square edges. This makes it great for chopping as well as paring.

BEVEL-EDGED. Although you can still find firmer chisels, they have been pushed aside by bevel-edged chisels. This type of chisel is generally a little thinner than firmer chisels. And its edges are beveled, allowing it to fit into a tight spot where a firmer chisel would be just too cumbersome. A bevel-edged chisel is great for paring. And, in a pinch, it can be pressed into service for chopping when the occasion arises.

MORTISE. The third type of chisel you're likely to see is a mortise chisel. It is characterized by one thing — its blade is thicker in cross section than either a bevel-edged or a firmer chisel. So they're well-suited for heavy chopping. And even though you may never chop out a mortise, they can come in handy if you need to remove a lot of waste from a deep recess.

Now most woodworkers don't need three *sets* of chisels. In my experience, a good set of bevel-edged chisels will handle most tasks. But as you think about the type of work you do (or want to do), you may want to pick and choose a chisel or two from the other types shown here. W

▲ Square-edged firmer chisels are stout enough for chopping, but can also be used for paring and trimming.

FIRMER CHISEL

▲ Bevel-edged chisels are ideal for paring. Their slender profile makes them a little easier to use and control.

BEVEL-EDGED CHISEL

▲ With their thick, beefy blades, mortise chisels can stand up to the heavy mallet blows needed for chopping out waste.

MORTISE CHISEL

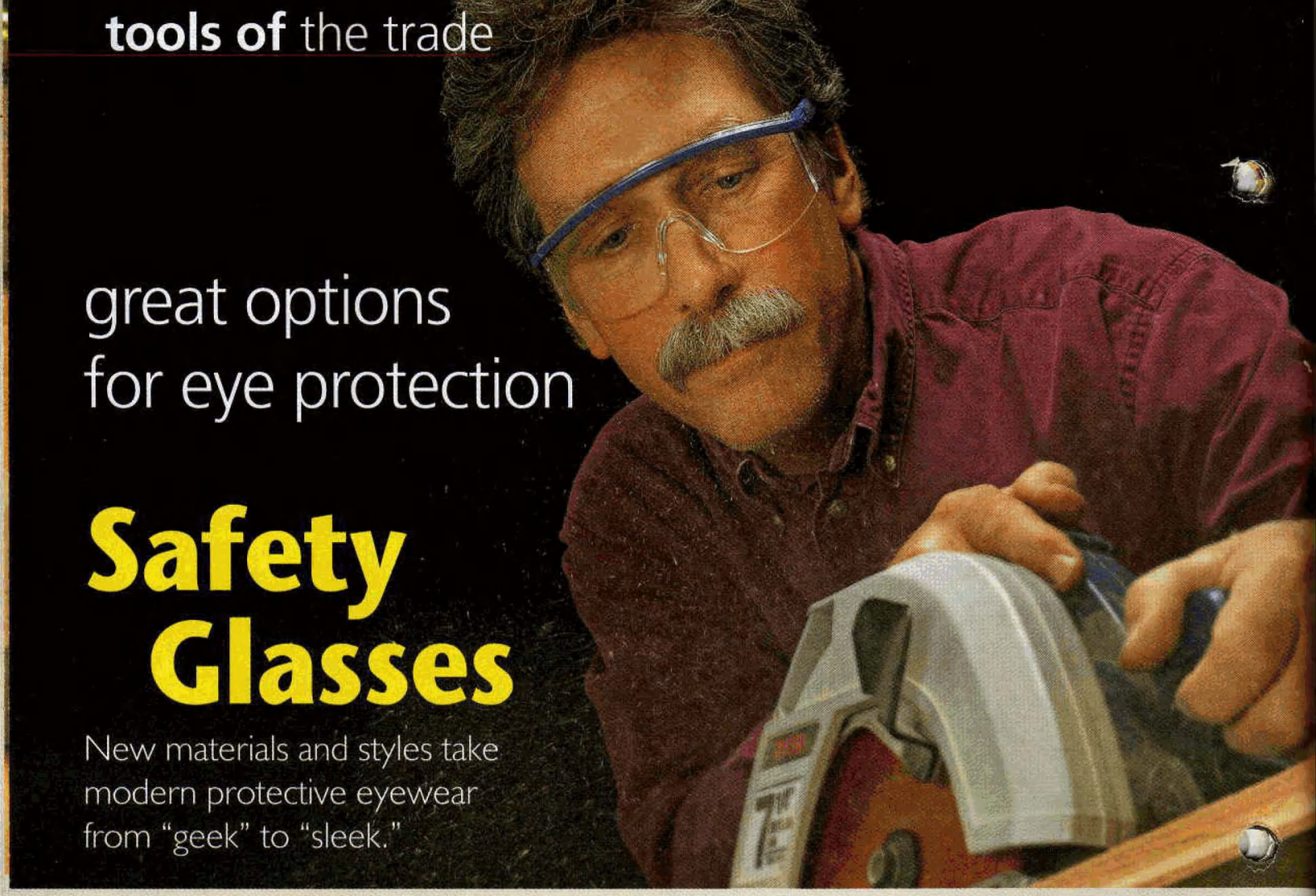

great options for eye protection

Safety Glasses

New materials and styles take modern protective eyewear from "geek" to "sleek."

"Just one little cut." How many times have you used that excuse for not wearing your safety glasses? Unfortunately, that's when most eye injuries occur. And the truth is, with all the innovations in style, comfort, and features, there's really no good reason *not* to be wearing safety glasses while in your shop.

NEW MATERIALS. The first thing you'll notice is that safety glasses have come a long way since the heavy black frames and soda-bottle-thick lenses you may have worn in shop class. Most are made from polycarbonate, a plastic that makes them so light you almost forget you're wearing safety glasses. And they come in different-colored frames that are stylish and comfortable.

TASK ORIENTED. They're also designed for specific tasks. You may have one pair to protect your eyes from flying sawdust, and another pair while working with finishes. And if your eyes are sensitive to light, you might need a third pair that's tinted, like you see pictured on the left.

TYPES. Protective eyewear comes in three categories. The safety glasses (also called spectacles) you see pictured above are the most popular. Safety goggles and face shields are covered in the box at the bottom of the next page.

Safety glasses have two main parts: the lenses and the frames. And those parts have gone through major changes over the years.

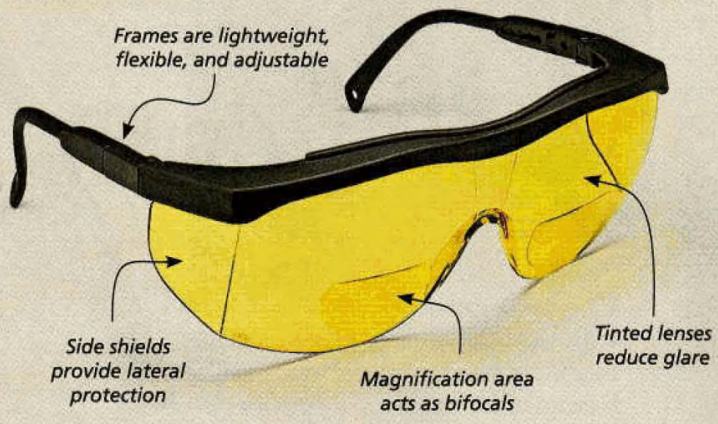

THE LENSES

The lenses of today's safety glasses are made in two levels of protection — basic impact and high impact. Basic-impact safety glasses are the most common and should provide you with adequate protection in your workshop. They're readily available at your local hardware store or home center.

EXTRAS. In addition to impact resistance, some safety lenses can protect your eyesight by blocking 99 to 100 percent of the sun's harmful ultraviolet rays. Some lenses come in various magnifications, like the bifocals pictured on the next page. And you can get lenses to match

the prescription of your regular, everyday glasses.

SIDE SHIELDS. Years ago, one of the easiest ways to tell if someone was wearing safety glasses instead of regular glasses was the cumbersome side shields along the arms. The side shields should be worn to prevent flying debris from getting around the main lenses. But most of today's safety glasses are made with integrated side shields in a "wraparound" style. By making the side shields part of the main lenses, they're less bulky while still providing good lateral protection.

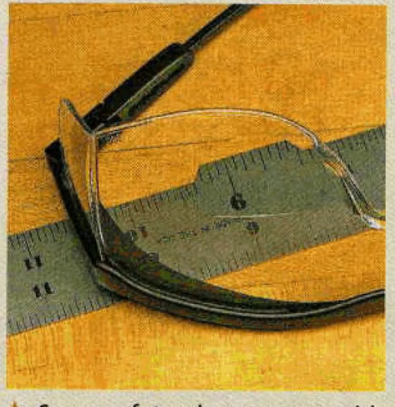

▲ Some safety glasses come with magnifying bifocal lenses to see markings better and clearer.

THE FRAMES

Less bulky can also be used to describe the frames of safety glasses. Manufacturers have gone beyond the basic requirements and are adding comfort to the frames.

FLEXIBLE. One of the first improvements was to get rid of the hard plastic frames. Now, frames are more flexible, yet firm enough to stay put without causing headaches at the end of a long day. Another improvement was to make the lenses easily replaceable. Now, you can changes lenses on the spot if they get scratched or you want to switch to tinted lenses.

ADJUSTABLE. However, the feature I like best is the adjustability built into the frames. Most come with arms that can be shortened or lengthened, as you can see in the top photo on the right.

The best frames, though, are the ones that "pivot" (lower right photo). You can adjust the tilt angle of the frames to get the best fit.

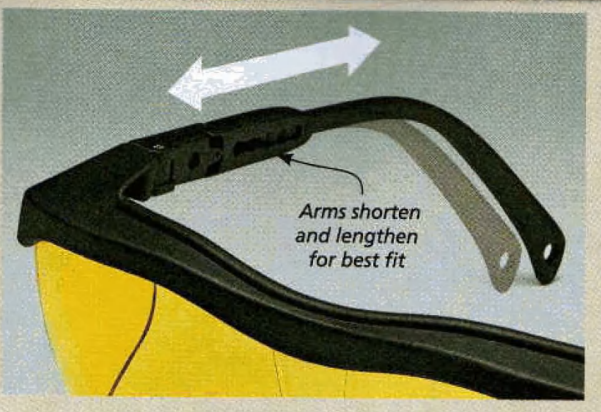

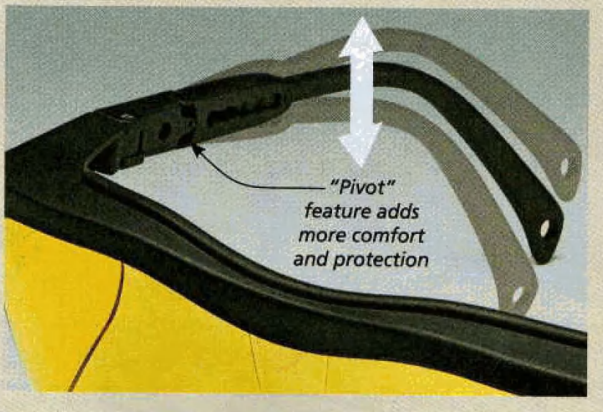

So, the advances in durability, protection, and comfort eliminate any excuse you can come up with for not wearing safety glasses. They're an inexpensive way to protect your valuable eyesight while working in the shop. W

Extra Safety: Goggles and Face Shields

If you're looking for even more protection for your eyes, safety goggles and face shields can help.

The safety goggles on the left below form a seal around the eyes, preventing dust particles from getting under or around them. Ventilated goggles allow air to circulate through them, preventing fogging. Unventilated goggles form an airtight seal around your eyes to keep liquids and fumes from getting into them.

On the right is a face shield, which protects your face when using a tool that generates a lot of flying debris, such as a grinder or lathe. But you should still wear safety glasses in case some wood chip finds its way around the shield. And they provide little protection against liquids.

As you can see below, face shields come with adjustable headgear to fit your head, and you can get the shields in clear or tinted polycarbonate.

The bottom line is to look at the task and select the right protective eyewear for the job.

making perfect Plywood Panels

All you need to get crisp, square edges every time is a hand-held router and a flush trim bit.

ONLINE EXTRA
video workshop

You can see how to use your router to get perfect pieces at: www.woodsmith.com

One of the biggest challenges in working with plywood is turning large sheets into smaller workpieces with crisp, tearout-free edges. But cutting a 4' x 8' sheet on the table saw can be a hassle. So I take the simple route and use a circular saw. But there are a couple places where you can run into trouble.

The biggest problem with a circular saw is that the cuts are usually less than perfect. The veneer is often splintered and the edges may have blade marks, or burning.

The second trouble spot is cutting pieces to size accurately. It doesn't take much to end up with a piece that's a little "off." This is especially the case with angled cuts on odd-shaped workpieces.

So what I've come up with is a simple, two-step routine that takes the hassle out of getting clean, perfectly sized plywood panels. In a nutshell, what you do is "rough" cut the pieces from the sheet, then trim them to final size with a hand-held router. The best thing about this is that you're really taking care of both of the problems I mentioned earlier at the same time.

ROUGH CUT FIRST. The first step in the process is cutting the parts from the sheet. The main thing is that instead of trying to get an exact cut, you cut the workpieces a bit larger than the final size.

A FEW BENEFITS. Although you're adding another step, there are a couple of good reasons for doing it. The first reason is it's much easier to handle smaller, rough-cut panels than it is to try to make a dead-on cut in a full-size sheet.

The second reason is that you gain some flexibility to "tweak" the panel size as you build a project and end up with accurate parts. You don't need to make the panels much bigger than the final size. I typically cut them ¼" wider and longer than I need. This gives enough "wiggle room" to adjust the size without wasting a lot of material.

GETTING CLEAN EDGES

At this point, you're ready to trim your parts down to the final size. The equipment for truing the edges is about as simple as it gets — just a router, a flush trim bit, and a straightedge. And making the cut is just nuts-and-bolts routing. But for accurate results every time, there are a few things I'd like to point out.

LAY OUT LINES. To get started, you'll need to lay out the final size of the panel on your rough-cut blank. If you have a clean edge to work from,

you can use a framing square to mark the lines referenced off that edge. If not, you'll have to establish a baseline with a long ruler or metal straightedge and lay out the panel from that. You'll use these lines to position a straightedge that will guide the router bit.

When it comes to angled cuts, you'll need to do things a little differently. Here, it's just a matter of marking the start and end points of the cut and connecting the dots with a straight line.

STRAIGHTEDGE. In the photo on the opposite page you can see I used a piece of ¾" MDF for the straightedge. And the reason for using this material is simple. It's easy to get a smooth, void-free edge for the bit to ride along. Most of the time, there's a piece in my scrap bin that's just the size I need.

The width of the straightedge doesn't really matter, it's the length that is important. At the very least, you want the straightedge to be as long as the workpiece. But I like to make it an inch or two longer on each end. This way, I have solid support at the start and end of the cut.

In the drawing above, you can see how I used carpet tape to attach the straightedge to the workpiece right along the layout line. (You could use clamps, but they may get in the way of the router.)

To get the best results, don't rout more than ⅛" from the edge of the workpiece, as shown in detail 'a' below. If you do need to remove more material, it works best to clean up the edge in several passes.

There's one last thing I want to mention about locating the straightedge. It's taped to the "good" face of the plywood. This way, it backs up the cut and prevents the veneer from tearing out.

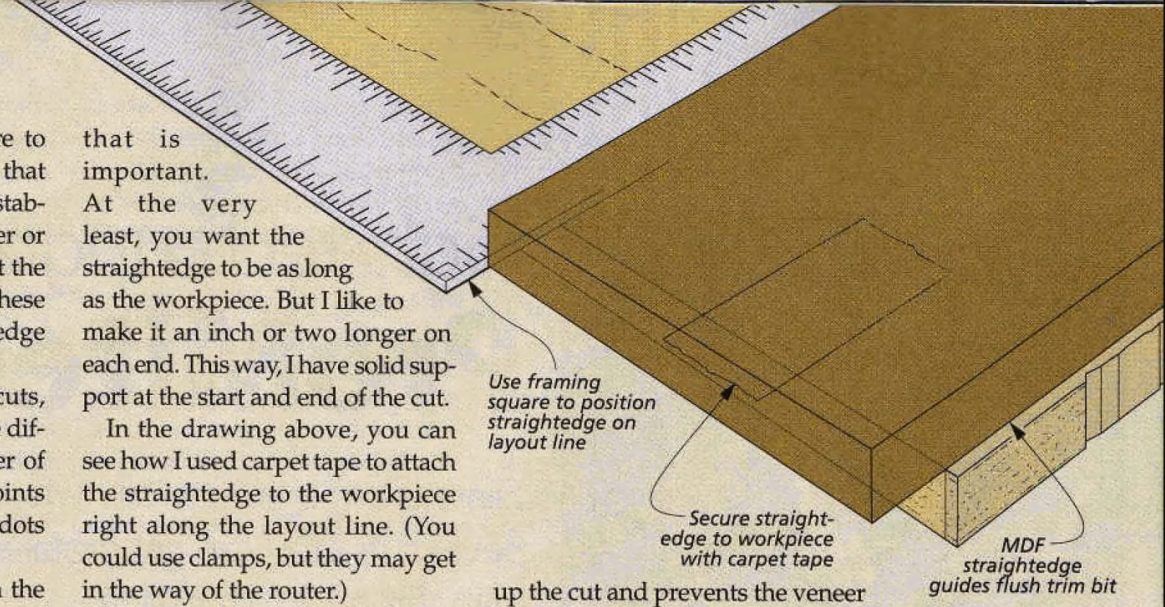

MAKING THE CUT. With the workpiece and straightedge set up, you can flip the assembly over and clamp it to your workbench, as you can see in the drawing below. Now, you can adjust the bit depth, turn the router on, and make the cut.

You can see the routing direction is from left to right. Moving this direction, the rotation of the bit draws the router against the straightedge for a clean cut.

At this point, the workpiece is sized and ready for cutting joinery or adding edging. Either way, you'll have a good start on getting a gap-free assembly.

You can even use this technique for cleaning up the edges of hardwood stock. To see how, take a look at the box below.

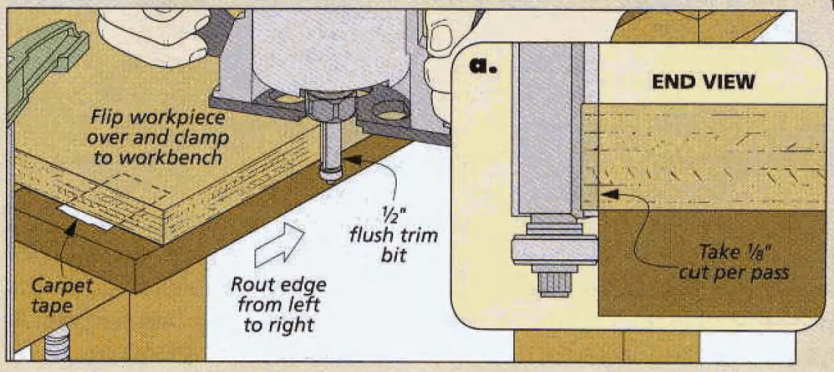

How-To: Put a Straight, Clean Edge on Rough Stock

One of the first tools you think of to put a straight edge on hardwood is a jointer. But if it's a long board or has a really rough edge, this can be a challenge. The good news is you can adapt the two-step technique mentioned above for use on hardwood boards (drawings at right).

To remove most of the rough edge, I like to use a jig saw. This way, I can cut away defects without any danger of kickback. Then you can attach a straightedge and rout the edge clean. This will give you one clean, square edge to run against the rip fence of the table saw.

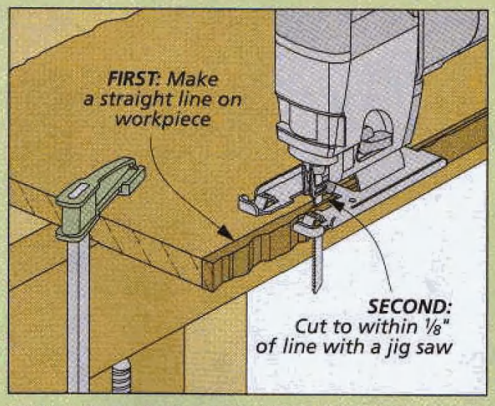

Cut to Rough Size. *Start by marking a straight line on the workpiece away from any flaws. Then use a jig saw to cut away most of the waste. Stay about ⅛" away from the line.*

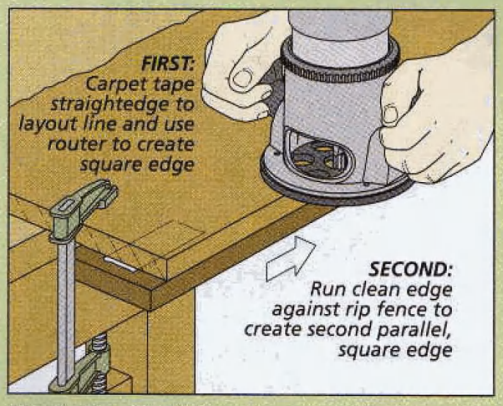

Flush Trim the Edge. *Now, to guide the router bit, you can attach a straightedge with carpet tape. Then flip the board over and clamp it to the workbench and rout the edge.*

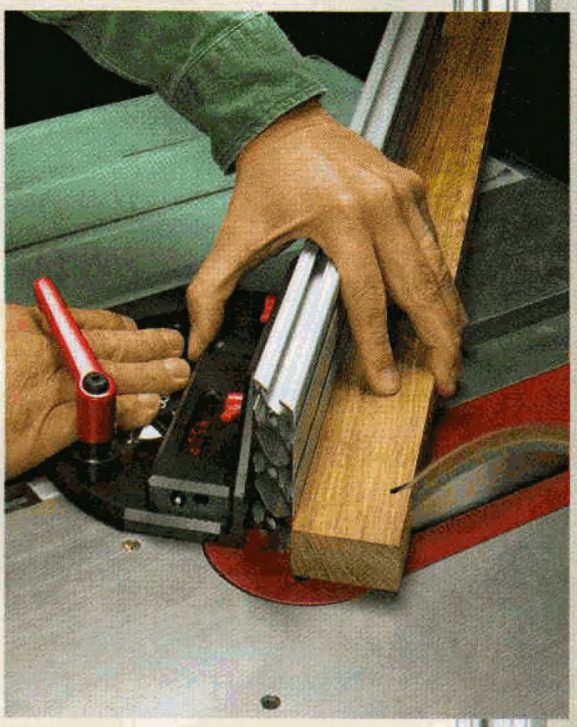

The *ProMiter-100* works like most other miter gauges — except it features a digital scale, making it a snap to cut perfect miters.

high-tech upgrade
ProMiter-100

Eliminate the guesswork when making miter and bevel cuts. You can get digital accuracy every time with this new miter gauge.

A lot of manufacturers are trying hard to improve the basic miter gauge and its accuracy. But how much can you really improve such a simple device?

One company, *Salazar Solutions*, thinks there's a lot of room for improvement. They've come out with a digital miter gauge (the *ProMiter-100*) that you can set to the nearest 1/10° (see Sources on page 49). No more squinting at a scale to set the angle. And it's dead-on accurate every time.

LOOKS CAN BE DECEIVING. The first time I saw the *ProMiter-100*, I have to admit I was a little surprised. I'm not sure what I was expecting, but when someone says "digital," you think of a bunch of fancy buttons and electronic displays. But the *ProMiter-100* looks deceptively simple, as you can see in the main photo, left. There's no angle scale like you'd see on a traditional miter gauge — instead there's just a small digital LED display. And the only button I could find was a tiny one on the side (photo below, right).

SETUP. There's not much to putting the gauge together — just install the fence and adjust the miter bar. The fence is a beefy aluminum extrusion that has eight T-slots built in to hold stop blocks and other accessories. Small set screws along the length of the bar let you get a perfect fit in the miter slot (left photo, opposite page).

CALIBRATION. Once you get the fence on and tightened, you're ready to calibrate or "zero" the unit to your saw. All you need for a starting point is an accurate framing square (lower left photo). Then you can make some test cuts and tweak the miter gauge to

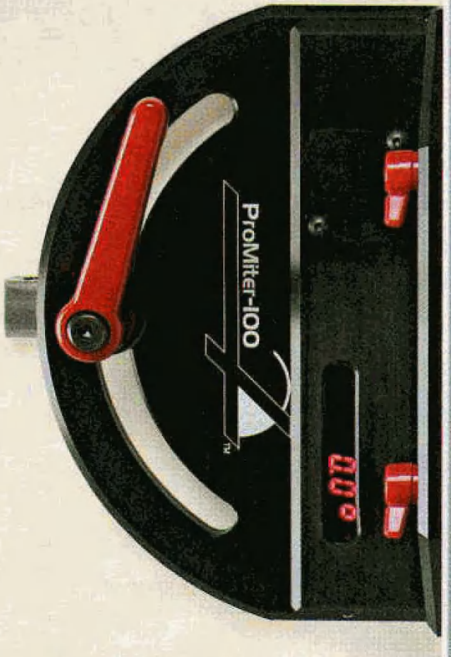

The *ProMiter-100* has a clean, modern look. There's no miter scale to indicate the angle. Instead, there's an easy-to-read digital display.

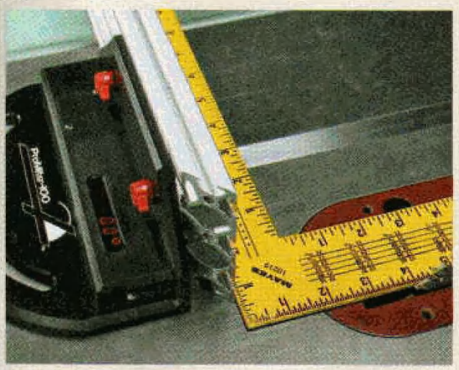

The first step in using the miter gauge is to calibrate it to your saw. An accurate framing square is all you need.

A small button on the side of the gauge controls the functions of the electronic display.

make a square cut. You press and hold the small button for a few seconds to set the display to 0° before making your first cut.

EASY TO USE. Setting the angle on this digital gauge is easy to do. Just loosen the clamping knob and rotate the head. What's really nice is that as you rotate the head, there's an audible "click" for every whole degree. It's a nice touch to let you know it's working. Once the angle is set, tighten the knob and you're ready to make a cut. The display automatically shuts off after about 30 seconds or so.

PRECISE BEVEL ANGLES. Having digital accuracy in a miter gauge is great, but this gauge has another useful feature. It can help set accurate bevel angles, too. It comes with an attachment for the miter bar that lets you set the angle of your saw blade with 1/10° accuracy. You can see this in the right photos below. The display can even be "flipped" so you can read it upside down. (See the box below for another option for setting the blade tilt angle.)

One more thing. When you first turn the display on, it shows you the temperature. The *ProMiter-100's* automatic temperature compensation circuitry will maintain its accuracy regardless of the temperature.

FINE POINTS. Overall, I think this miter gauge has potential as an upgrade for your saw. But there are a couple of things I noticed. First are the small knobs for attaching and locking the fence. They won't rotate 360° because they interfere with the body of the gauge. That makes installing the fence a little tricky.

And the large locking clamp took a little getting used to. It's spring-loaded, so to turn it you have to pull up and rotate it at the same time. Plus, I prefer using a more traditional upright handle for pushing the miter gauge across the saw.

Finally, it can be tricky to set an angle to an exact 1/10°. That's because any slight movement of the miter gauge head can make the display "flicker" between two numbers.

ACCESSORIES. *Salazar Solutions* has plans to manufacture several accessories like stop blocks. They'll also have a software upgrade that calculates compound miter cuts. Who would have thought that upgrading your miter gauge would be as simple as a software download?

While the *ProMiter-100's* $439 price tag is not for everybody, I can see tools getting a lot "smarter" in the coming years as technology makes its way into the shop. W

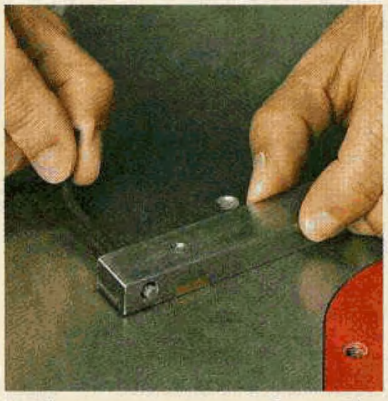

▲ Three set screws along the length of the miter bar adjust to fit your saw's miter slot.

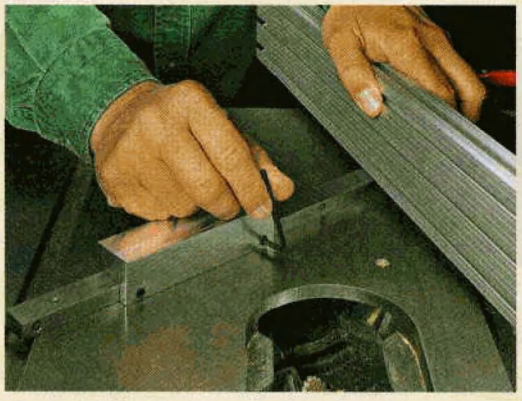

▲ To set the blade angle for a bevel cut, attach the magnetic adapter. This holds the miter bar to the blade to set the bevel angle.

▲ You can set the display to read upside down to make it easier to adjust the bevel angle of the blade.

Alternative Angle: Wixey Digital Angle Gauge

Sometimes great things come in small packages. That's the case with this digital angle gauge by *Wixey* (see Sources, page 49). It's a simple device for setting up your shop tools that's easy to use. You can use it to set angles on your jointer, band saw, table saw, or miter saw — anywhere there's a magnetic surface.

To do this, the bottom of the 2" x 2" gauge has three magnets embedded in the plastic case. For example, to set the bevel angle of the blade on my table saw, I just set the gauge on the top of the saw. Then you turn the unit on using one of two small buttons on the front. Calibrating the gauge is just a matter of pressing the "zero" button. Instantly, the large LCD will show zero degrees.

Once the gauge is calibrated, you attach it to the side of the saw blade (with the saw off, of course). The degree of tilt is indicated in the display to the nearest 1/10° (see photo).

It's an amazingly simple device that'll stand up to shop use. And for a little under $40, it's a deal. This pocket-sized gauge sure makes tool setup a lot easier.

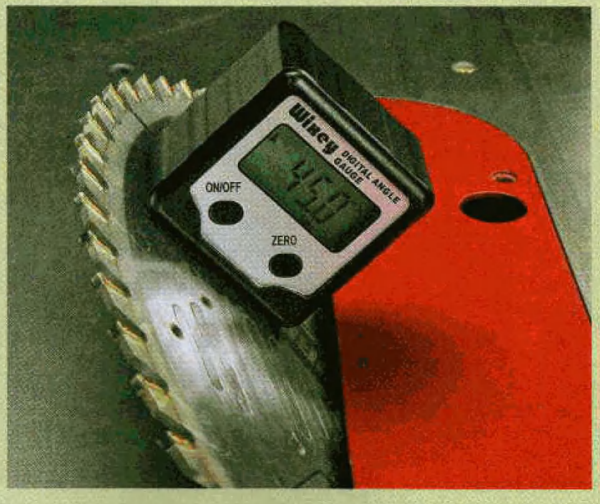

desktop Message Center

This desktop organizer is small in size but big in function. Its compact storage keeps your writing supplies in one convenient place.

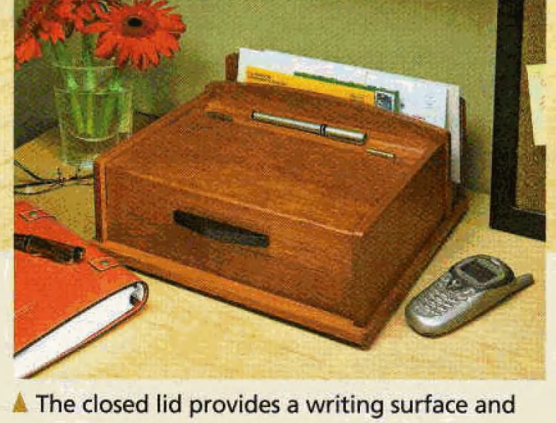

▲ The closed lid provides a writing surface and hides the items stored inside.

Trying to keep things organized near the phone or on my desk is always a challenge. It seems I'm always looking for a pen or pencil, some paper to write on, or an address or phone number. So I designed the message center you see in the photo above to help keep the things I use most often within easy reach.

This message center is compact. But don't let the size fool you. Just lift the lid and it's full of storage.

The inside compartments are designed to make it easy to find items you use every day. There's a card file to keep addresses and phone numbers at your finger tips. And a spring-loaded note dispenser lets you quickly grab a self-adhesive note whenever you need it.

The lid doubles as a writing surface when it's closed. And the back of the message center has a place to hold envelopes and mail. There's even a tray on top to keep a pen or pencil handy for quickly jotting down notes and messages.

CONSTRUCTION DETAILS

OVERALL DIMENSIONS:
12"W x 9½"D x 5⅜"H

Hinged lid closes to hide case contents and doubles as a writing surface

Letter trough holds envelopes and mail

Shop-crafted and painted lift adds a stylish look

Storage for additional writing supplies

The letter and mail holder is created by gluing spacer and trough back in place

Simple-to-build card file rack keeps addresses and phone numbers handy

Recessed tray keeps pens & pencils in easy reach

Lid held in place by rare-earth magnet

Case front/back dadoes and grooves make assembly and squaring easy

Tongue & groove joinery is easy to make

Spring-loaded dispenser places self-adhesive notes at your finger tips

Base sits on four hardwood feet

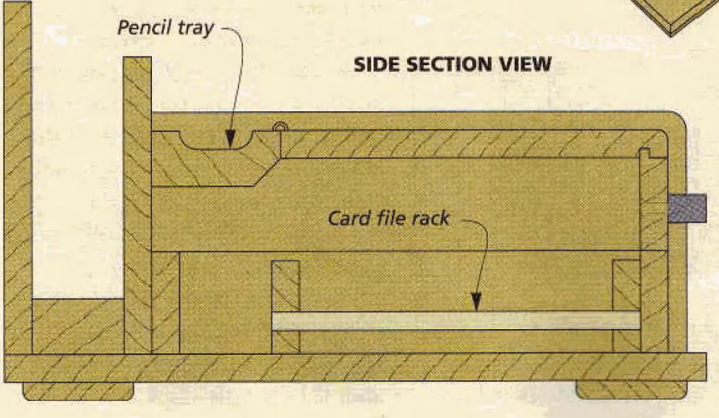

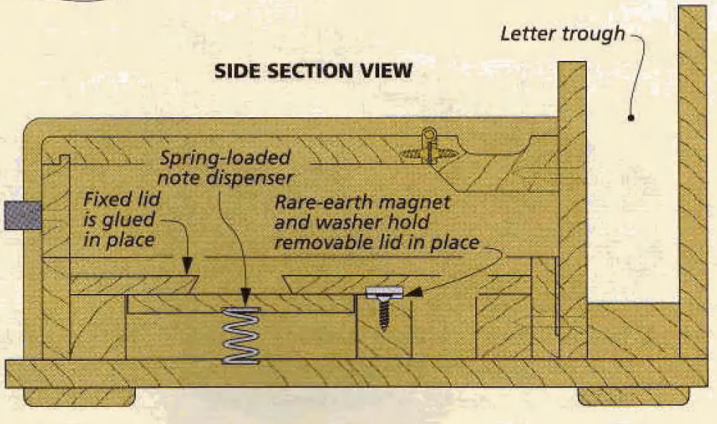

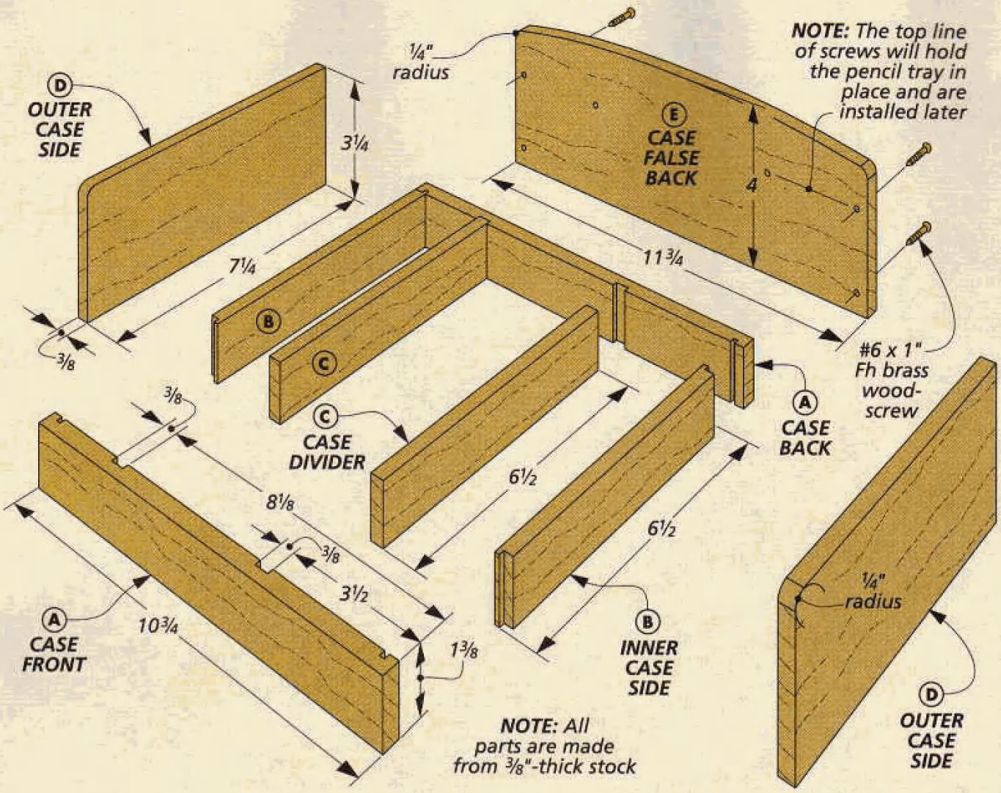

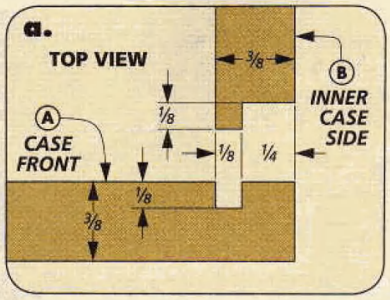

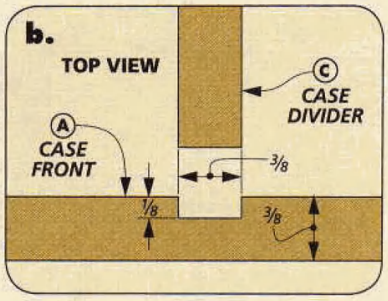

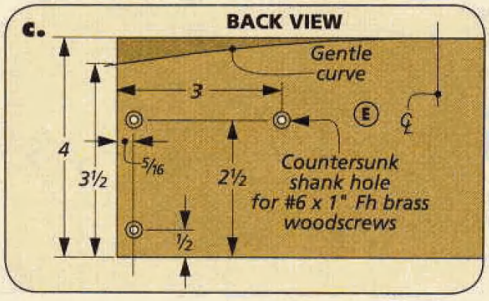

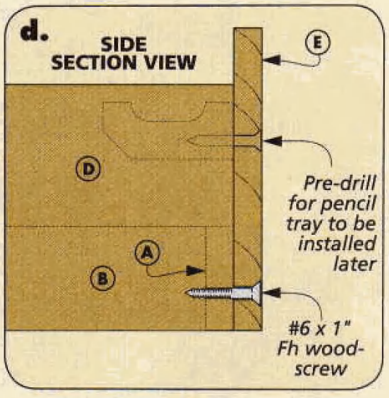

building the BASE

To build the message center, I began by constructing the case. The reason I started here is simple — all the remaining pieces in the project are sized to fit the case.

If you look at the drawing above, you'll see there's not really much to the case. It's basically an inner frame with dividers surrounded by two larger case sides and a back.

CASE. I built the case by first planing and then cutting six pieces of 3/8" stock to size. Then I used tongue and dado joints at each of the corners. These joints are easy to make and give the case some added strength.

Since the joints are visible, I used a straight bit in my router to cut the joinery. This way, each joint will have a flat bottom and nice appearance. But before you begin, you'll want your router table set up properly.

AUXILIARY TABLE TOP. Cutting the tongue and dado joints at the router table is easy. The only problem comes when routing the tongue on the side piece. Because this piece is narrow (only 1 3/8" wide), it can tip into the wide openings in some router tables as it's passed across the bit.

To solve this problem, I made the auxiliary table top you see in the box at left. This way, I could rout these small pieces safely. Just remember that the auxiliary table raises the router table surface. So you'll need to adjust the height of the bit.

With your router table set up, you're now ready to cut the tongue and dado joints. This only takes a couple of simple steps.

Shop Tip: Routing Shallow Dadoes

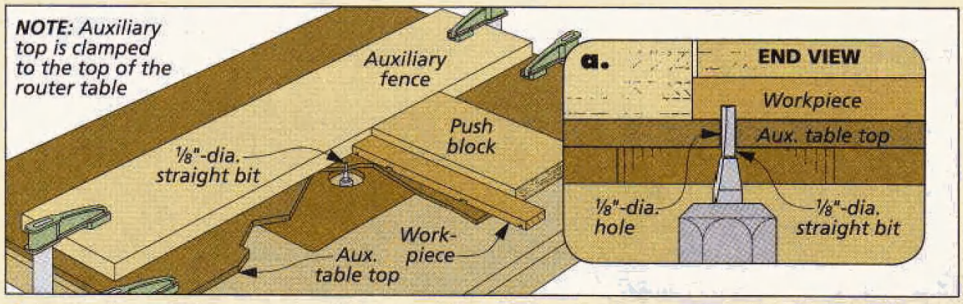

▲ To add a zero-clearance auxiliary top to your router table, simply drill a 1/8" hole through a piece of 1/4" hardboard, slip the hole over the bit (detail 'a'), and clamp the top in place. Then clamp a straightedge in position for the fence.

TONGUE AND DADO. The first step is to cut a 1/8" dado at each end of the case front and back as shown in detail 'a' on the opposite page. Using the same setup, you can move the fence and cut the dadoes for the two dividers (detail 'b' opposite page).

Next, rout a rabbet at the ends of each side piece to create the tongue. I like to cut the rabbet in a couple of passes. This way, I can sneak up on the final thickness of the tongue to ensure it fits in the dadoes in the case ends. I also used a push block to help prevent chipout.

With the corner joints completed, you can assemble and glue the inner case pieces together.

OUTER SIDES AND BACK. There are a couple more things you'll need to do to complete the base. First, cut the two outer case sides to size. Then, round off the top front corner of each one. Finally, glue them flush at the back to the inner case to form the sides.

Next, you can cut the case false back to size. This piece forms the front of the letter trough and has a long arc across the top as shown in detail 'c' on the opposite page. It's attached with glue and screws to the case (detail 'd' on opposite page).

ATTACH THE BASE. With the case built, you're now ready to mount it to the base. I used screws to attach the case to the base (detail 'a' above). This way, the wood can move.

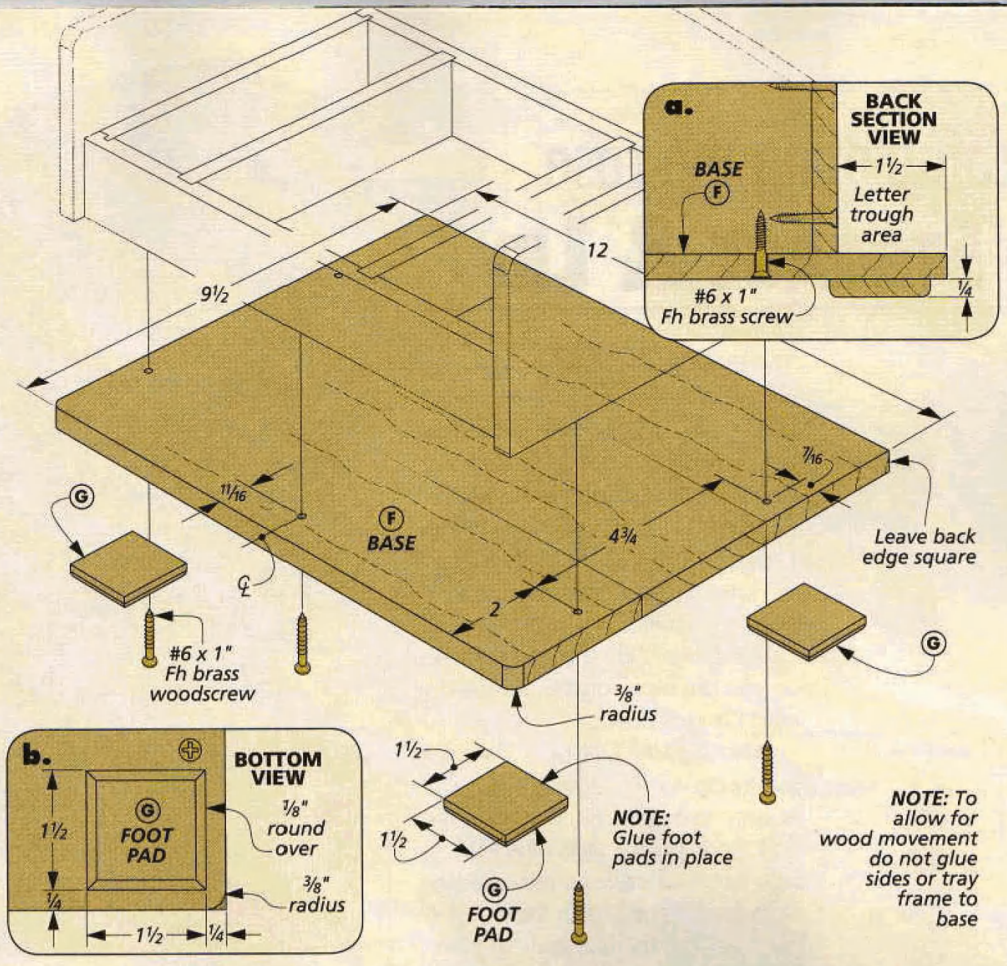

FEET. All that's left is to add the feet. Each foot is a square piece of 1/4"-thick stock with a roundover at the bottom edge of all four sides (detail 'b' above). The photo at right shows you how I added the roundovers.

Your work on the base is now complete. The next thing you'll want to do is build the compartments that fit inside the case.

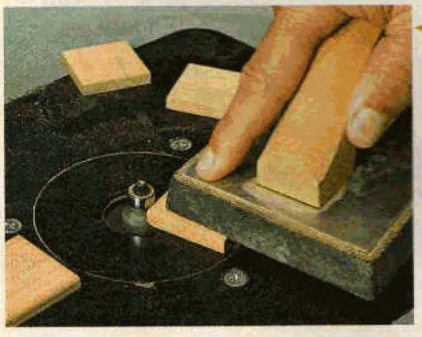

A grout float used as a push block lets you use your router to round the edges of the feet.

Materials, Supplies, & Cutting Diagram

A Case Front/Back (2)	3/8 x 1 3/8 - 10 3/4	
B Inner Case Sides (2)	3/8 x 1 3/8 - 6 1/2	
C Case Dividers (2)	3/8 x 1 3/8 - 6 1/2	
D Outer Case Sides (2)	3/8 x 3 1/4 - 7 1/4	
E Case False Back (1)	3/8 x 4 - 11 3/4	
F Base (1)	3/8 x 9 1/2 - 12	
G Foot Pad (4)	1/4 x 1 1/2 - 1 1/2	
H Card File Front/Back (2)	3/8 x 1 1/4 - 4 1/4	
I Note Dispenser Walls (3)	3/4 x 7/8 - 3 1/8	
J Note Removable Lid (1)	1/4 x 3 1/16 - 3 3/8	
K Note Lift Platform (1)	1/4 x 3 1/16 - 3 1/16	
L Note Fixed Lid (1)	1/4 x 3 1/8 - 1 3/4	
M Pencil Tray (1)	3/4 x 1 3/4 - 10 3/4	
N Lid Top (1)	3/8 x 5 1/4 - 10 5/8	
O Lid Front (1)	3/8 x 1 3/8 - 10 5/8	
P Lid Lift (1)	3/8 x 1/2 - 4	
Q Trough Spacer (1)	3/4 x 1 1/4 - 11 1/2	
R Trough Back (1)	3/8 x 4 3/4 - 11 3/4	

- (2) 1/4"-dia. x 5" Wood Dowels
- (1pr) 30 mm Brass Cabinet Hinges
- (1) 3/4"-long Compression Spring
- (1) 1/2"-dia. Rare-earth Magnet
- (1) 1/2" Steel washer
- (1) #4 x 5/8" Screw
- (2) #4 x 5/8" Fh Brass Woodscrews
- (11) #6 x 1" Fh Brass Woodscrews

3/4" x 5 1/2" - 48" Cherry (1.8 Bd. Ft.)

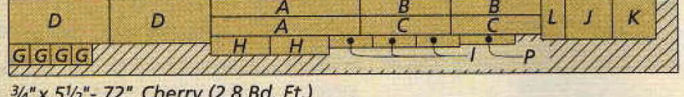

3/4" x 5 1/2" - 72" Cherry (2.8 Bd. Ft.)

completing the case
STORAGE & LID

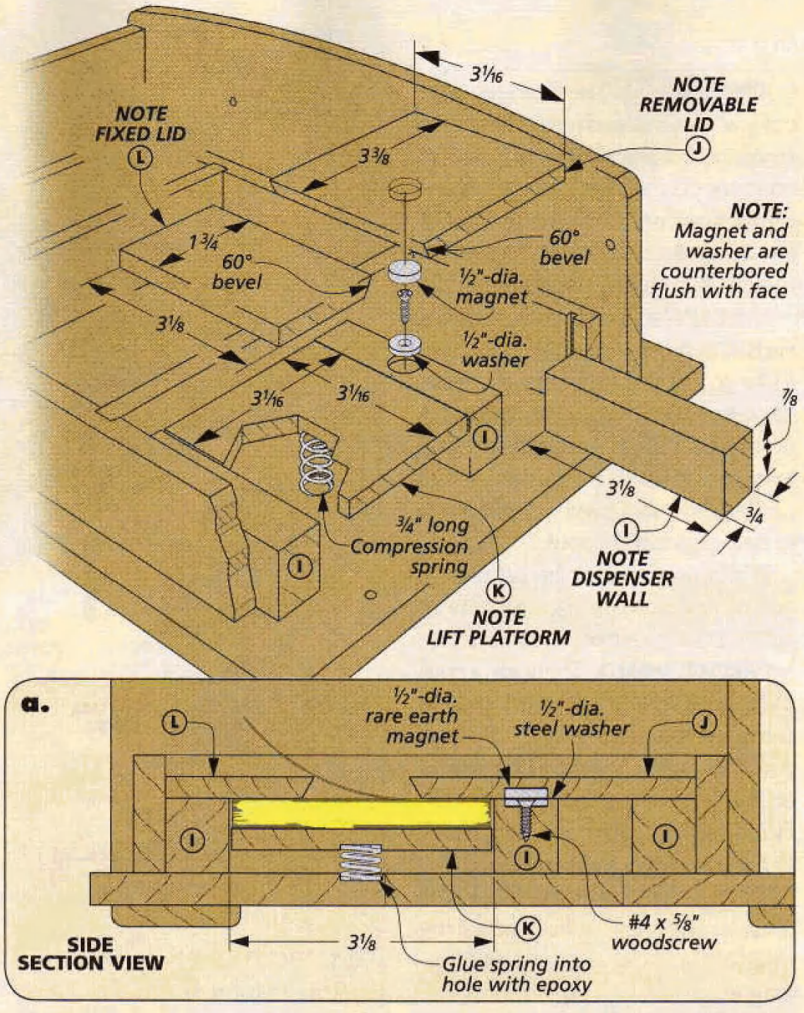

The thing that makes the message center so useful is the storage areas inside the case. Three individual compartments contain a rack for file cards, a self-adhesive note dispenser, and a space to store pencils, pens, and other writing supplies.

The compartment for storing your writing supplies is already formed by the divider at one side of the case. So you can move on to building the card file rack next.

CARD FILE RACK. The card file rack sits in the center compartment and is easy to build. Just cut the front and back pieces to size and drill two holes in each of them (detail 'a' below). Then slip in the ¼" dowels that hold the file cards in place. Finally, glue the rack in position between the two case dividers.

The next thing you'll want to build is the dispenser that holds the self-adhesive notes. At first glance, this looks a little complicated. But it's really pretty easy.

NOTE DISPENSER. As you see in the drawing above, the note dispenser sits in the end compartment. It's made to hold and dispense a pad of self-adhesive notes. The note pad sits in a recessed area of the compartment and uses a spring-loaded platform to raise the notes so they can be easily accessed.

Start by cutting three blocks from ¾" stock. These blocks form the three walls inside the compartment at one side of the case. The walls create a small recess to hold the note pad and support the fixed and removable lids you'll build later.

Before gluing the walls in place, you'll need to drill a stopped hole in the middle of one of the blocks so you can screw a small steel washer in place. The washer provides a surface for the rare-earth magnet to hold the removable lid in place.

Next, cut the removable lid, platform, and fixed lid to size. These are made from ¼"-thick stock.

These three pieces work together to help you dispense the notes from the pad. As you can see in detail 'a' above, the note pad sits on a platform with a compression spring pushing up from below. This keeps a note always in position to be used.

Two lids above hold the note pad in place as you pull the note from the pad. The fixed lid is glued in place. And the other lid is held in place by a magnet above and a steel washer below so it can be removed whenever you need to replace the pad. Bevels along the edges of the lids let the notes slide easily from the pad as the notes are dispensed.

Now you're done with the inside storage. You can next turn your attention to building a lid to enclose the storage compartments. It's made in three pieces — a front, top, and pencil tray. I built the tray first.

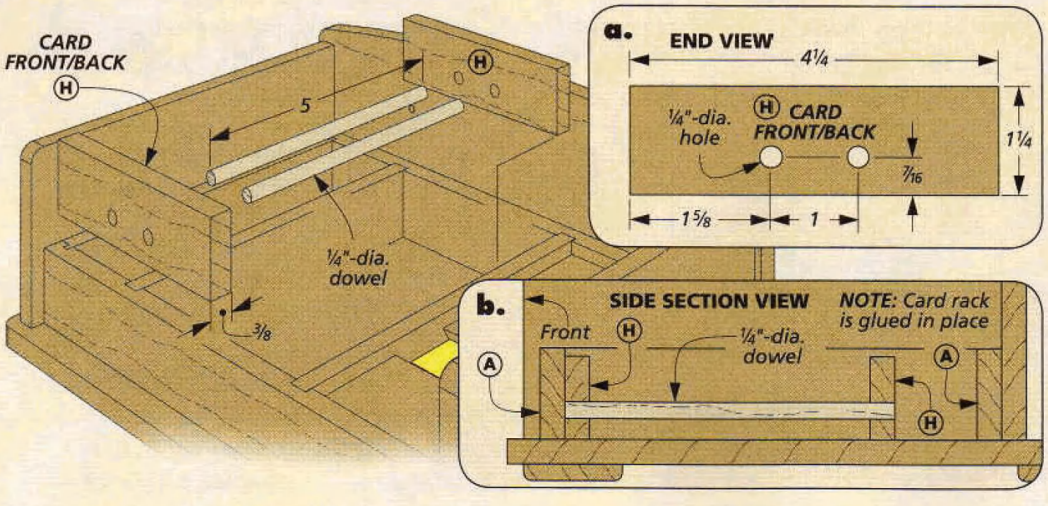

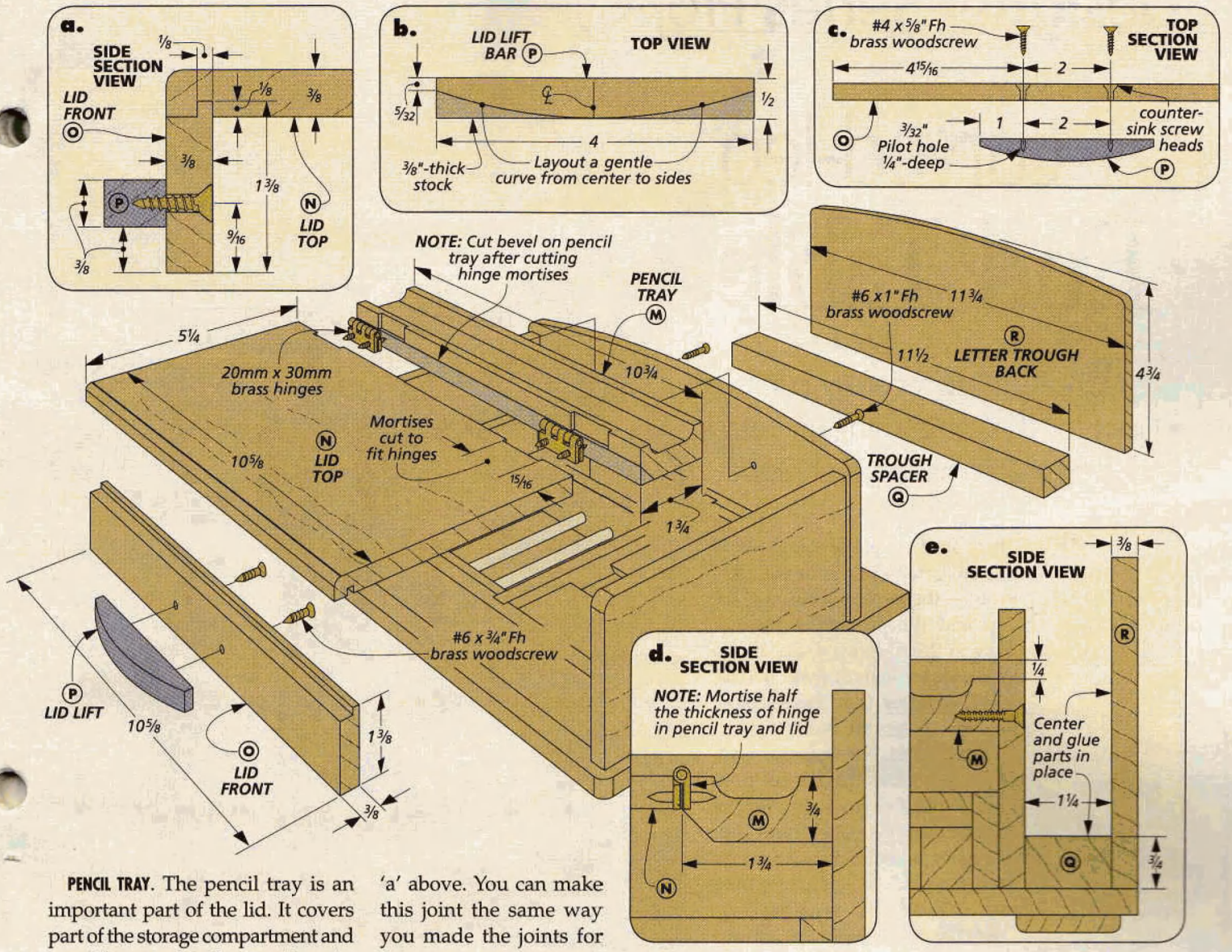

PENCIL TRAY. The pencil tray is an important part of the lid. It covers part of the storage compartment and provides a surface for attaching the hinges for the lid. Page 31 shows you how I used my router and just a few simple steps to make the tray.

One thing that will help you out when it comes to fitting the lid is to leave the back side of the pencil tray a bit wider. This way, you can dry fit the lid and the tray. Then you'll be able to trim away just the amount needed for the lid to fit perfectly.

After fitting the pencil tray, I used my router to cut two small mortises for each of the hinges. Finally, before completing the lid, I cut a bevel along the bottom front edge to soften the sharp corner as shown in detail 'd' above. This also provides more room to reach inside the case.

TOP AND FRONT. The rest of the lid is made by joining a top and a lid front with a tongue and dado joint like you see in the drawing and detail 'a' above. You can make this joint the same way you made the joints for the storage case.

Just like the pencil tray, I initially left the bottom edge of the front piece a little bit wider. Here again, this lets you dry-fit the lid and then trim the front to the exact width to make sure the lid fits perfectly at the bottom before it's assembled.

With the lid front cut to final width, you can use your router to cut two small mortises on the back edge of the top. Then install the hinges and attach the lid.

To complete the lid, you'll need to add a lid lift on the front (detail 'c'). To make my lift, I used a small piece of leftover stock that I cut to the size you see in detail 'b' above.

LETTER TROUGH. The message center is almost complete. All that's left is to build the letter trough at the back.

Adding this final touch is simple. Start by gluing a simple spacer to the base at the back. Then you can glue the trough back to the spacer like you see in detail 'e' above.

Your desktop message center is now complete. Just stock it with a few pens and pencils, file cards, a pad of self-adhesive notes, and it's ready for you to use. W

You'll find everything you need to know to make this pencil tray in Shop Notebook on page 31.

curved-leg End Table

Create the gracefully curved legs for this table using an easy, bent-lamination technique.

There are a couple of things about this table that catch your eye right away — the sweeping curve of the legs and the decorative, circular inlay in the round top. But if you take a closer look at these details, you'll discover that there's more here than meets the eye.

LAMINATED LEGS. For example, each of the legs looks like it's cut from a single piece of wood. But they're actually made up of thin layers, bent in a curve and glued together. The good news is, the laminating technique is pretty easy to master.

EPOXY INLAY. You might also assume that the decorative inlay is wood. In fact, it's colored epoxy. This creates a great effect without the hassle of fitting inlay pieces. It's just poured into a shallow, routed groove.

This project is a great opportunity to try both techniques. And the end result is an attractive table.

◄ The key to bent-lamination is a solid bending form. The double layers of MDF on this form provide plenty of strength and lots of places to add clamps. The form also detaches from the base so it can be used with a miter gauge to trim the ends of the legs to their finished length at the table saw.

start with the LEGS

Like most tables, this project can be divided into two parts — the base and the top. The base consists of four identical legs made using a bent-lamination technique. Since each leg needs to remain in a bending form for a full day, I began by making the legs first. This way, you can work on the top in between gluing up the legs.

MAKE A TEMPLATE. To get started on the base, the first step is to lay out the shape of the legs on a piece of ¼" hardboard, like the one you see on the far right. This way, you'll have a full-sized pattern. And later you'll use it to lay out the shape of the bending forms. For now, just cut out the template and sand it smooth.

CUTTING THE LAMINATES. Now you're ready to cut the thin strips for the laminations. For a curve of this radius, the thickness of each strip should not exceed ⅛". I did this by cutting some ¾"-thick stock into 1¼"-wide blanks and then resawing them into thin strips, as shown below. You'll want to stack and mark the pieces in the order they were cut to keep them in place for the glue-up. Keeping them in order will help you get a seamless glue line when you assemble the pieces.

At this point, you can feel how the strips will bend. Don't be concerned if it seems like they won't bend far enough without cracking. They'll become more flexible as they absorb some moisture from the glue.

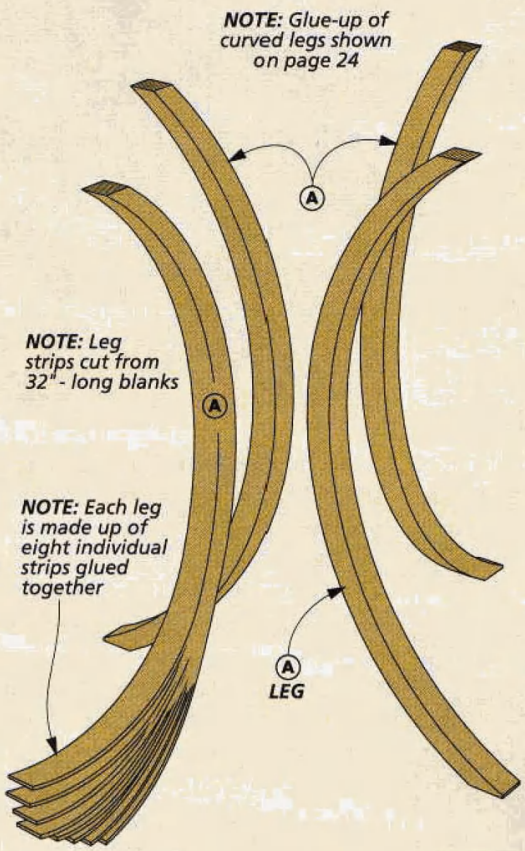

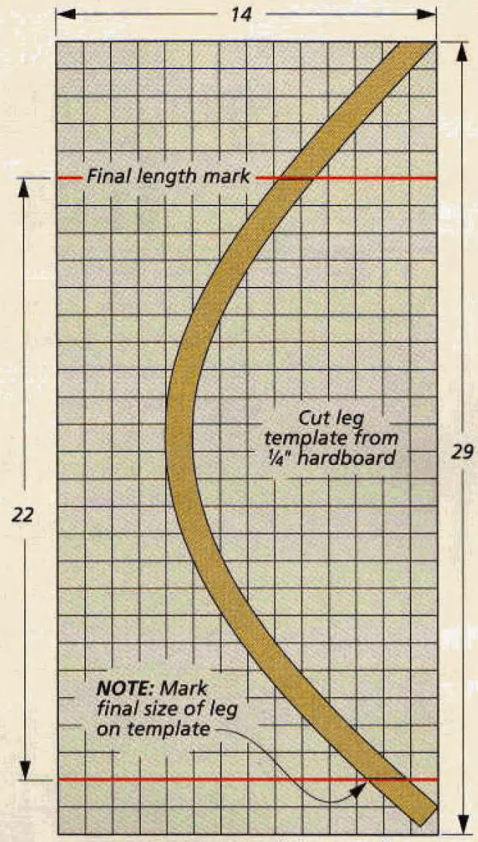

LEG TEMPLATE *(1" squares)*

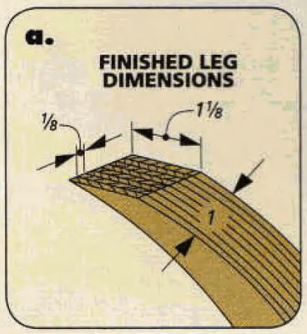

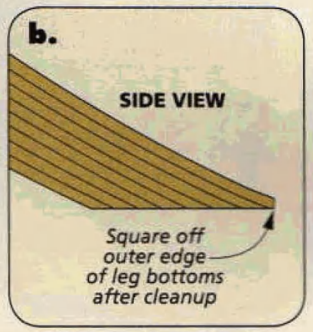

How-To: Cut Thin Strips

To cut the thin strips needed for the laminated legs, first install a good rip blade on your table saw. Then just set your fence a hair wider than ⅛" and rip the strips. Make sure to use a push block with a small heel to safely hold the thin pieces.

Now you can remove the saw marks by using a sanding drum on your drill press and a support block attached to the fence. With a 100-grit sleeve on the drum, all you need to do is pull each strip through the drum to leave a smooth, flat surface ready for glue-up.

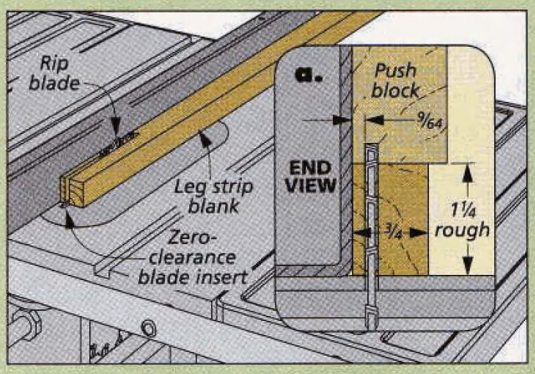

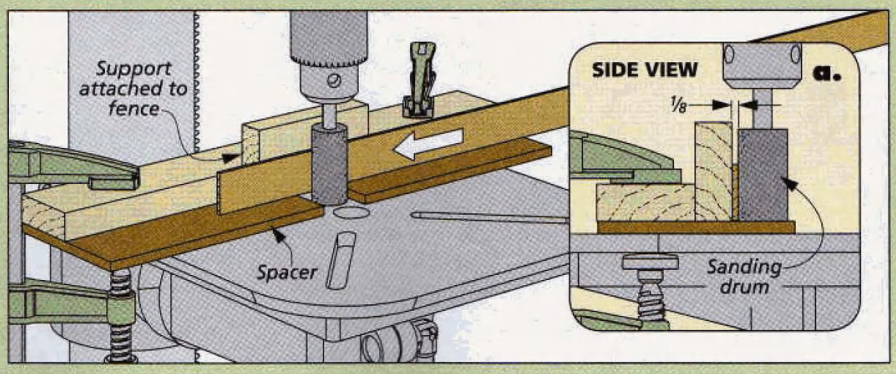

gluing up the LEGS

With the strips for the legs cut and the template shaped and sanded, you're ready to build the bending forms. The box at the bottom of the page shows you how that's done.

After you've completed the form, it's a good idea to give it a coat of finish and thoroughly wax the surfaces that will come in contact with glue. This way, you'll have a much easier time removing the pieces.

GLUE THE LAMINATIONS. Once the form is built, you're ready to start gluing up the legs. One thing to keep in mind here is that you'll be covering a lot of surface and it can be time-consuming. So it's important to use a glue that gives you plenty of open time before it sets up. I used *Titebond Extend*, a strong PVA glue that provides extra open time.

How you apply the glue is also important. You can roll or brush it on, but you'll need to make sure to fully cover every surface to prevent voids in the lamination (Fig. 1).

CLAMP THE FORMS. After you've completed the glue "sandwich," just tip it on its side, as shown in Fig. 2, bend it around the form, and use a couple dowels to hold the lamination secure. Then move the outside form into position and add a single clamp (Fig. 3) in the center to hold things in place. Now you can add more clamps to the form, alternating between the right and left side of center, slowly bringing the pieces together. Use a piece of scrap and a mallet (detail 'a') to tap the strips flat against the bottom of the form.

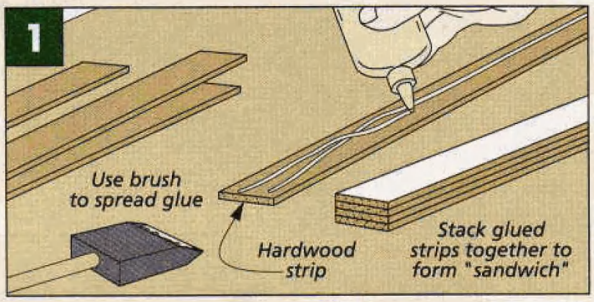

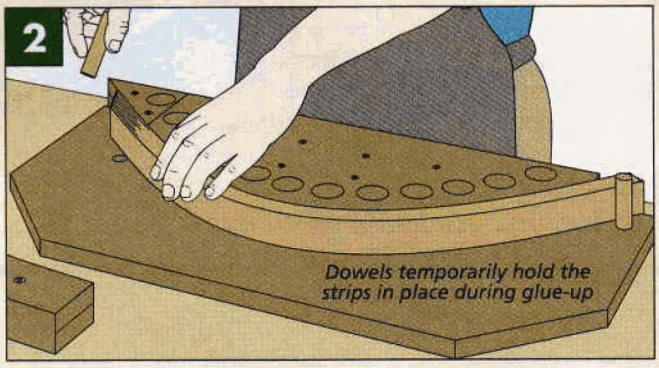

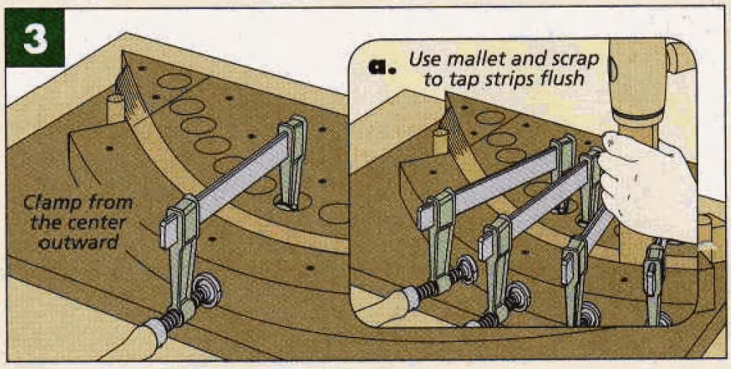

How-To: Build the Bending Form

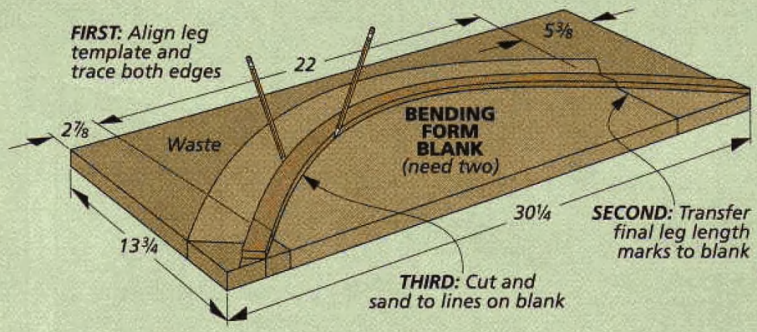

Start With the Template. *Trace the shape of the template onto a piece of ¾" MDF. Cut out both pieces of the form, staying on the waste side of the cut. Then sand the edges smooth.*

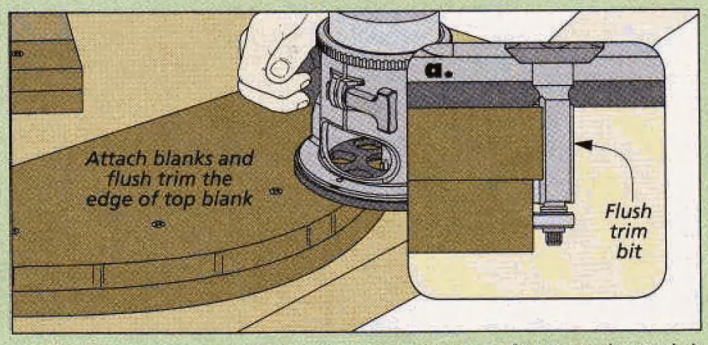

Add a Second Layer. *Cut out a second piece of MDF and attach it to the first layer with glue and screws. Then, with a flush-trim bit in the router, trim the pieces to match.*

CLEANING UP. You'll need to give the glue a full day to cure before removing the leg from the bending form. After gluing up the remaining three legs, you can break out a scraper and remove the squeeze-out. I also like to follow up with a good sanding to remove as much of the hardened glue as possible. Then just flatten one edge of each leg at the jointer and run the other side through your planer. Plane the leg to a final width of 1⅛".

SQUARE THE ENDS. Now you're ready to trim the ends of the legs parallel. This way, they'll sit flat on the floor and also create a flat surface for the top of the table. The bending form comes in handy for making these cuts. Just remove the inside form and attach it to an auxiliary fence on your miter gauge, as shown in Fig. 6. Then you can clamp the leg in position on the form and make the squaring cuts on each end.

FLATTEN ONE FACE. With the legs cut to length, the next step is to create a flat spot on the inside face of each leg for a center block that will be added later. This will allow you to assemble the legs into a solid base.

To do this, remove the form from the miter gauge and place the flat edge against the rip fence (Fig. 7). Hold the leg in position with spring clamps, well out of the way of the table saw blade. For this cut, I carefully adjusted the rip fence to just barely shave off the outside edge of the curve on each leg (Fig. 7a).

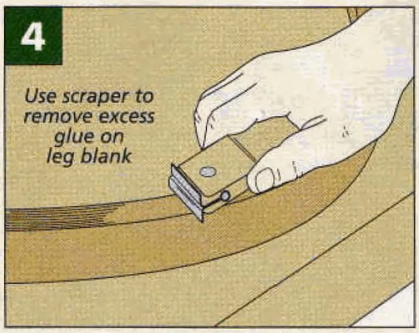

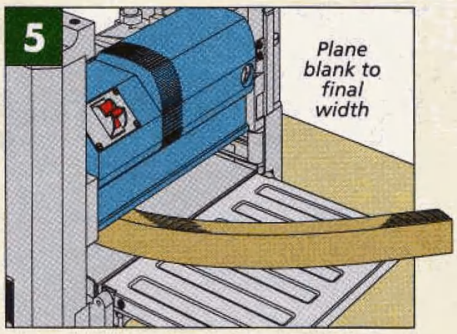

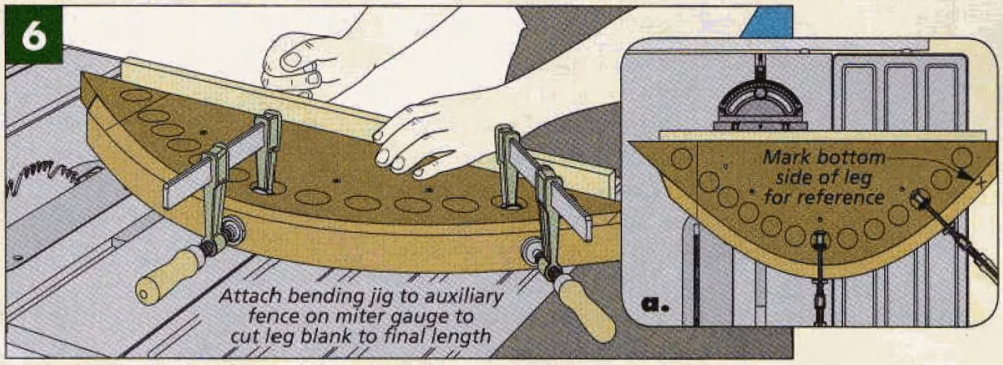

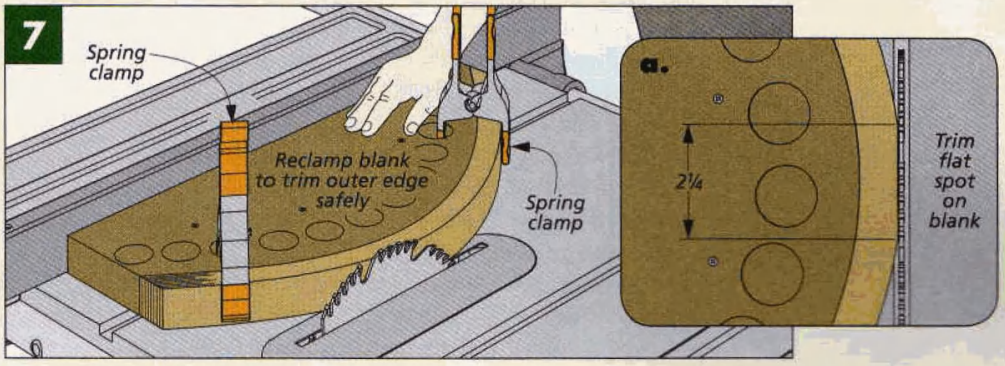

FINISHING TOUCHES. To complete the legs, I moved to the router table and "softened" the edges using a ⅛" roundover bit. I rounded both the inside and outside edges, avoiding the flattened face. Then I sanded the outside tip of the bottom of each leg to match the round profile. Now, just give the pieces a final sanding and they're ready to assemble.

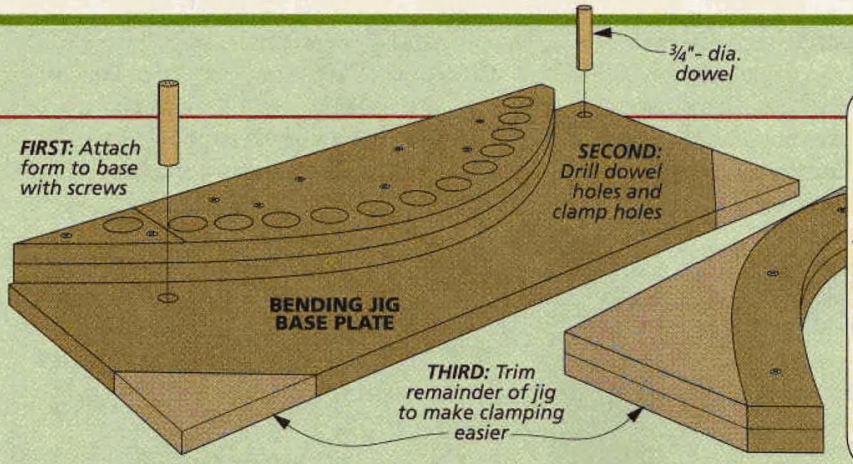

Add a Base. *Mount the inside form to a base using screws. Then drill a series of 1½"-dia. holes for clamps. Also add two ¾"-dia. holes for the dowels. Trim the corners to make it easier to tighten the clamps.*

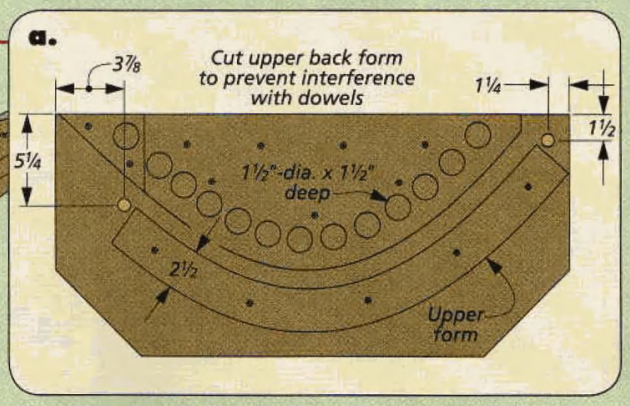

Complete the Form. *Cut the outside part of the form to a uniform width to provide even clamping pressure. Then spray on a coat of finish and wax both parts of the form.*

adding the Top & Center Block

With the legs complete, the next step is making the top. You'll need to have it ready before joining the legs so you can use it to keep the assembly square.

A ROUND TABLETOP. As you can see in the illustration at right, the top is glued up from narrower boards. It's a pretty straightforward assembly, but you'll want to take the time to align your stock for the best grain match. You may also want to use cauls to keep the boards flat.

After you've smoothed and sanded the blank, you're ready to cut the top to size. To do this, I used a router and trammel. This allowed me to cut the circle and add a shallow groove for the inlay using the same setup just by adjusting the radius of the cut. You can see how I did this on the next page.

The last step is to glue the legs together to form the base. The box at the bottom of the page shows an easy way to assemble the base and keep it aligned and square.

Now just add a finish and the table is sure to find a good home next to your favorite chair.

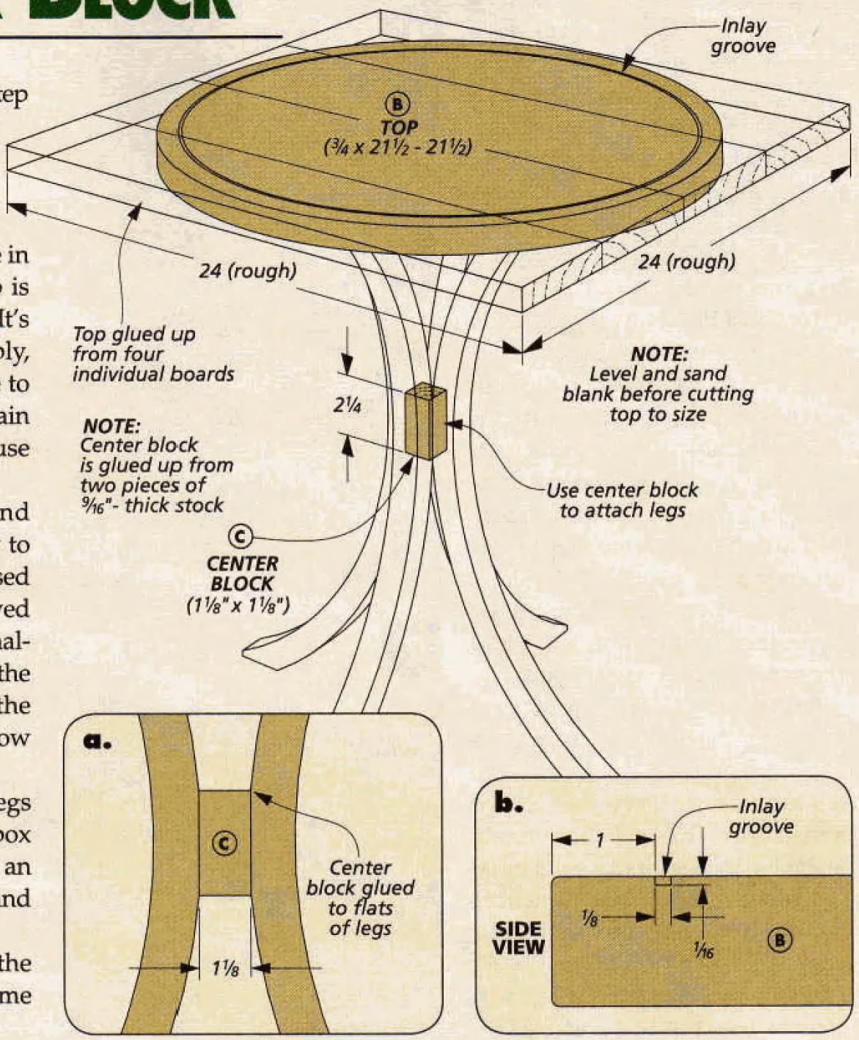

Shop Tip: Base Assembly Details

The key to successfully assembling the base is to glue up the first two pieces flat and square. You can do this by laying two legs on your workbench and clamping a straightedge to the bench top to use as a flat reference for the ends of the legs. Then it's just a matter of gluing the center block in place and clamping the assembly. After it's dry, drill and counterbore holes in the ends, as shown in detail 'a.' Then attach the assembly with screws and use the tabletop to keep things square as you add the remaining legs.

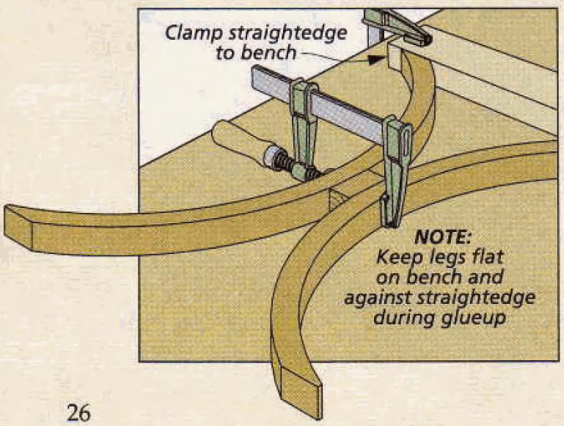

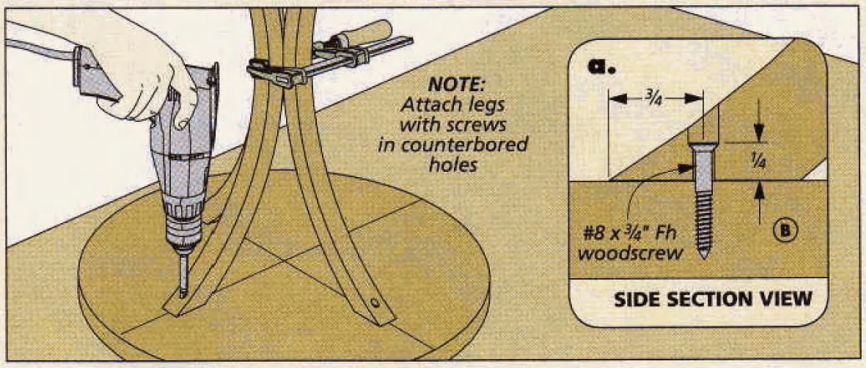

How-To:
Rout Circles with a Trammel

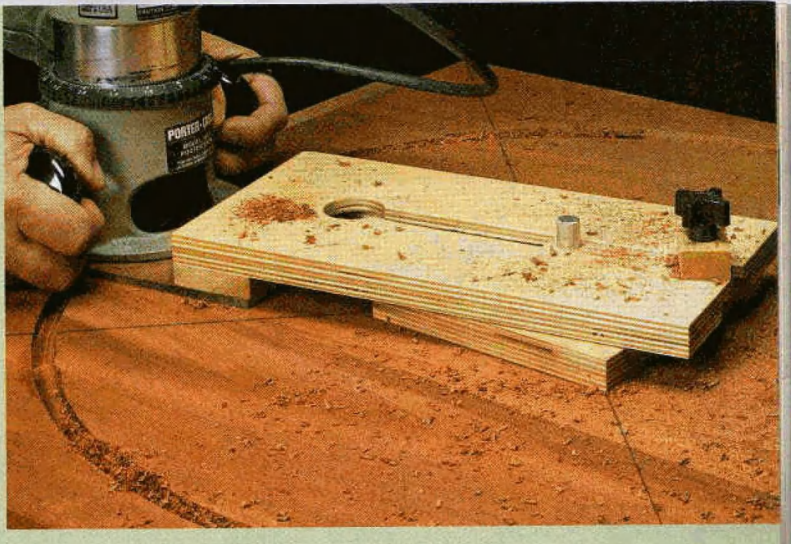

When I need to cut a circle, like the top for a table, I reach for my router and a trammel. There are a couple good reasons why I like this method. First, it's quick and easy to set up and make the cut. But, more importantly, it cuts a perfect circle and leaves a smooth edge that requires very little sanding.

THE TRAMMEL. The shop-built trammel I use is pretty simple to make. You can find the plans for it on page 30. It's very stable and accurate. And unlike most other trammels, this one doesn't require you to drill a hole in the workpiece for its pivot pin. The pin fits into a base that's held in place with carpet tape.

SETTING UP THE CUT. To get started, you'll need to elevate the workpiece off the bench so you can make a through cut. I used carpet tape and a couple pieces of scrap on the bench. Then I taped the workpiece to them (Fig 1.) Make sure to place the tape so it will hold both the top and the waste in place. This way, they can't move as you cut through.

Now you need to find the center of the workpiece. An easy way to do this is to draw intersecting lines from the corners, as shown in Fig. 1. Then line up those marks with the corners of the base, tape it in position, and you'll be assured of a centered cut.

ROUTING THE CIRCLE. With the base in position, the next step is to install a ½"-dia. straight bit in the router. Then, adjust the trammel to establish the diameter of the circle. Remember that you need to measure from the center of the pivot point to the inside edge of the router bit to get the right diameter. Then you just tighten the lock on the arm.

For a cut this deep, I always make multiple passes. This way I know the router won't bog down. In this case, I made three passes, lowering the bit ¼" after each pass.

INLAY CHANNEL. To cut the groove for the epoxy inlay, all you need to do is move the adjustable arm 1¼" in toward the center and install a ⅛"-dia. straight bit. The epoxy will adhere to the channel very well, so you only need to rout a 1/16"-deep groove. You can rout this groove in a single pass. Refer to page 28 for the details of adding the epoxy inlay.

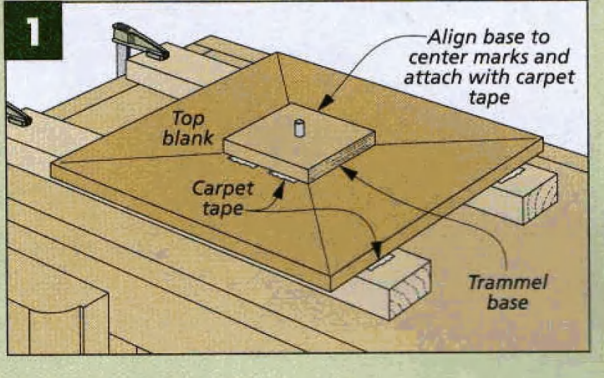

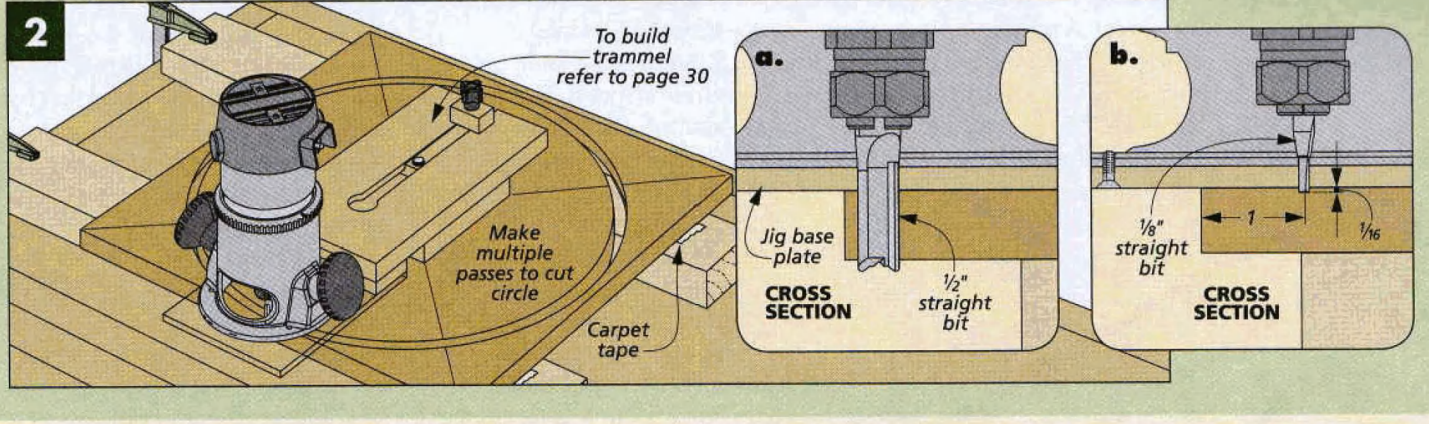

Materials, Supplies, & Cutting Diagram

A Leg Strips (32)	⅛ x 1⅛ - 32
B Top (1)	¾ x 21½ - 21½
C Center Block (1)	1⅛ x 1⅛ - 2¼

- (4) #8 x ¾" Fh Woodscrews
- Epoxy

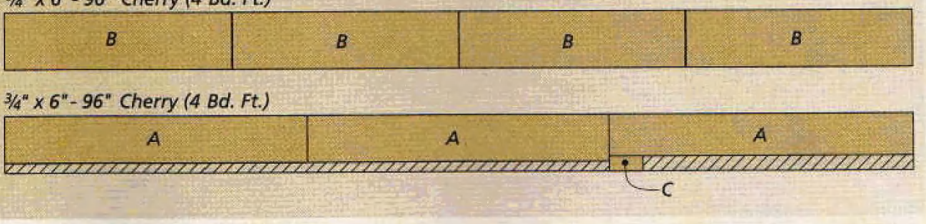

adding an Epoxy Inlay

Give your projects an eye-catching inlay in minutes, not hours.

Traditional wood inlays are a great way to dress up the appearance of a project. The problem is cutting and fitting small, oddly shaped inlay pieces can be both difficult and time-consuming. An easy alternative is to use colored epoxy instead of wood. Epoxy will flow into just about any shape, saving a lot of time and effort over conventional wood inlays.

▲ Test the color mixes on a sample board to find the shade you want for your project.

For example, the table on page 22 features a round top with an inlay near the edge, shown above. Hand fitting small, curved pieces of wood into the circular channel would be a pretty tough task.

But you can get a similar effect by simply mixing up a batch of epoxy and adding a little color. Then you just apply the mixture into a shallow recess cut in the shape of your choice. With this technique, I was able to add a great-looking design detail without a lot of trouble.

GETTING STARTED. Like any inlay, the place to begin is by creating a recess. For the round tabletop, I used a trammel and a router with a ⅛" straight bit to cut the groove. And because epoxy adheres so well, the groove only needs to be 1/16" deep.

PREPARING THE WOOD. After you cut the recess for the inlay, there's just one more step before mixing the epoxy. To prevent the epoxy from bleeding into the grain, it's a good idea to seal the wood first by spraying on a coat of lacquer. And to make it easier to remove any excess epoxy, rub a coat of wax on the surface of the wood.

MIX EPOXY AND COLOR. With the surface prepared, the next step is to choose an epoxy. I've found most brands work fine, but it's best to use a slow-setting epoxy. This way, you'll have plenty of time to get it in place before it starts to harden.

You can use just about any kind of coloring in epoxy, from aniline dyes to the black furniture powder I used on the table top. You'll just want to avoid colors that are soluble in the type of finish you'll be adding to the piece. For instance, if you're planning to use a water-based finish, stay away from water-soluble colors or they will

bleed when you apply the finish, even after the epoxy cures.

It's a good idea to mix up a few batches and test them on scrap pieces first. Then you'll get a feel for how well the epoxy works into the grooves. You can also experiment with different coloring agents to find the right mixture for the inlay. For information on the types of epoxy and colors I used, refer to Sources on page 49.

APPLYING EPOXY. When you've found the shade you like, you're ready to start filling in the inlay. You can see the step-by-step process in the box at right. If the epoxy mixture is thin enough, you can draw it into a syringe and then simply squeeze it into the recess. I like this method because it gives me better control. And it also makes cleaning up the excess a lot less hassle.

If the mixture is too thick for a syringe, you can press it into the recess using a thin piece of scrap wood or plastic. Just be sure to add enough so the epoxy remains slightly proud of the surface.

CLEANING UP. Since you waxed the surface, the overflow will come off pretty easily with a sharp chisel. The bottom two photos at right show you how to clean up the epoxy and fill in any exposed air bubbles. You can remove the wax with mineral spirits. Then, after a final sanding to remove the sealer coat of lacquer, you're ready to add a finish. Using this simple technique, you'll find even the most intricate inlays are possible. W

▲ To make removing the excess epoxy easier, first apply a coat of lacquer to seal the grain and then rub on a coat of wax.

How-To: Working with Epoxy

There are a couple things to keep in mind when working with epoxy. First, it will bond to just about anything, including your skin. So I always wear rubber gloves when mixing and applying epoxy. Second, the resins not only smell bad, but can cause allergic reactions in some people. So it's a good idea to work in a well-ventilated area. The same rule applies for sanding the hardened epoxy. The dust can be a real irritant, so use a good dust collector on your sander and wear a mask.

Start by mixing the epoxy according to the manufacturer's instructions (usually, equal amounts of resin and hardener). Then mix in the color. Stir the epoxy gently to minimize air bubbles.

A disposable plastic syringe makes it easy to apply the epoxy. You can cut the plastic tip to fit the size of the groove. Make sure to overfill the groove a little bit to allow for some shrinkage.

After about an hour, use a chisel to remove most of the overflow. At this point, the epoxy is rubbery. After it's cured (usually 8 hours) move on to a hand scraper, then sand the inlay smooth.

Holes caused by air bubbles in the inlay are almost unavoidable. But you can fill them using a drop of epoxy on a paperclip or toothpick. Then just sand again after the repairs are dry.

SHOP NOTEBOOK

Router Trammel Jig

Cutting the round top for the table on page 24 is an ideal job for a router and a trammel jig. It not only cuts a perfect circle but allows you to rout the groove for the inlay. The problem is, most trammels require a hole in the center of the workpiece for the pivot point. The design of this trammel solves that problem.

If you look at the photo, you'll see that the trammel is made up of a slotted adjustable arm that fits over a base. The base is secured to the workpiece with carpet tape. A pivot pin in the base allows the adjustable arm to rotate (see the drawings below).

I started by making the adjustable arm. A dado blade in the table saw forms the groove on the bottom of the arm. I drilled the hole at the end of the slot then cut out the waste with a jig saw (detail 'b').

The base comes next. There's nothing tricky about it. It's a square piece of plywood with a center hole for the pivot pin.

The T-shaped index block comes next. The goal is to make it fit in the grooved slot in the adjustable arm (detail 'a'). A small piece of hardwood acts as the clamping block when adjusting the radius of the jig. The star knob and threaded insert complete the adjustment assembly.

Finally, add an acrylic baseplate to your router. I used my router's factory baseplate as a pattern for the screw holes. Fasten a spacer to the adjustable arm, then you can attach the baseplate to the spacer. All that's left is to attach your router.

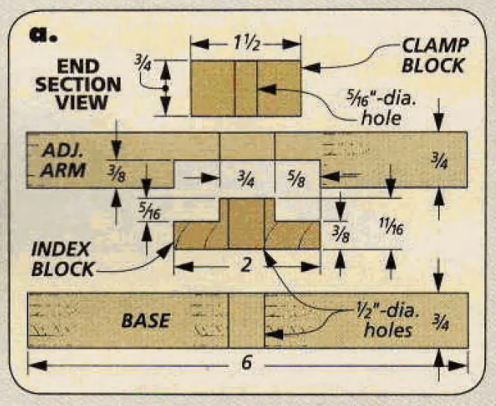

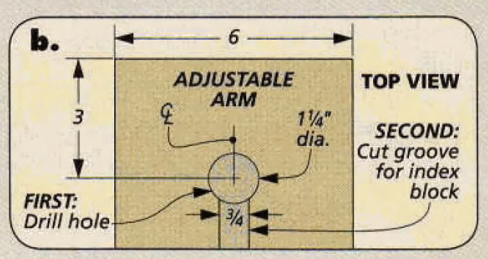

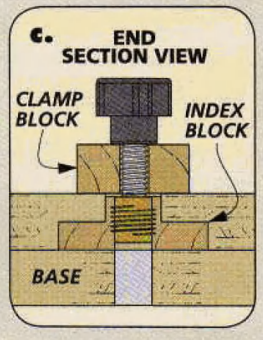

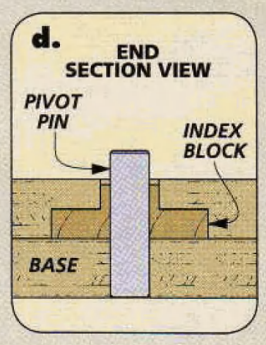

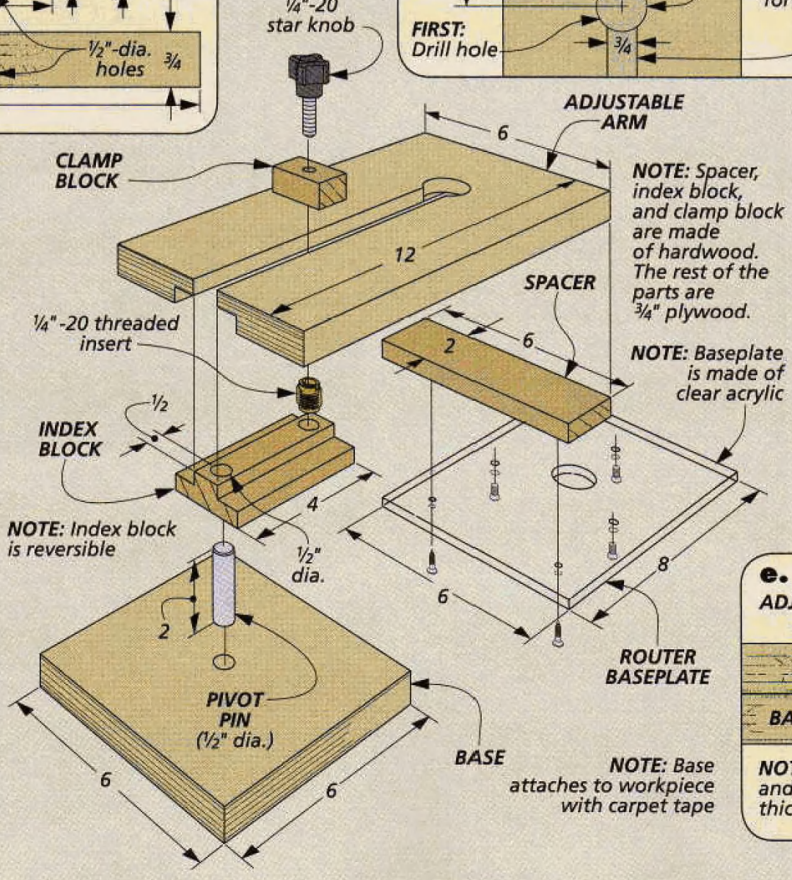

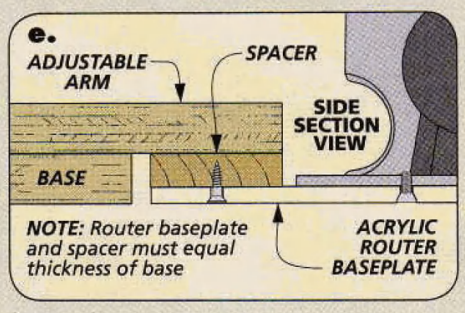

Routing A Pencil Tray

The desktop message center on page 16 wouldn't be complete without a place to store pencils and pens. So I added the pencil tray you see in the photo at right. It's easy to make at the router table. And it only takes three steps and two router bits.

I started with a long workpiece so I could trim it to exact length later. The first step is to rout the two outside edges of the tray, as shown in the top photo on the right. I used a core box bit because I wanted a radiused groove, like you see in the bottom photo at right. Fig. 1 below illustrates how this is done in two passes on the router table.

Next, I mounted a straight bit in the router to clean out the groove (Fig. 2). The key is to rout down the center of the workpiece at the same depth as the first cuts. This way, you'll avoid any "steps" or ridges in the bottom of the groove.

Now all that's left to do is a little sanding to make the bottom of the tray nice and smooth. I made a narrow sanding block, like you see in Figure 3, and wrapped sandpaper around it. Then I made long strokes on the bottom of the groove until it was smooth. Finally, you can cut the tray to its finished length and glue it in place.

All you need to make this pencil tray are a couple of commonly available router bits.

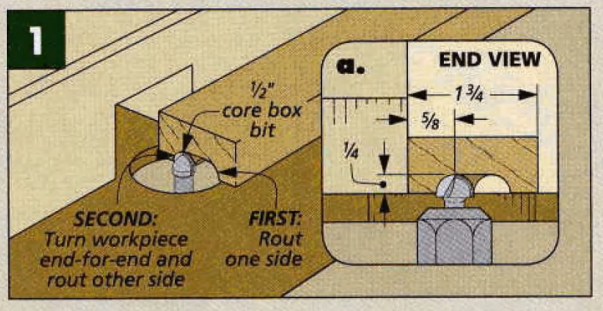

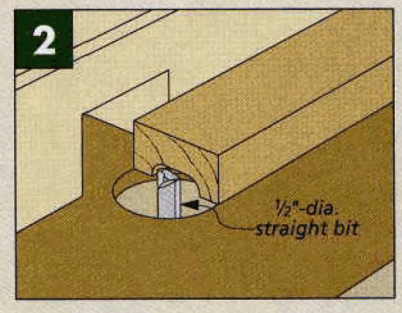

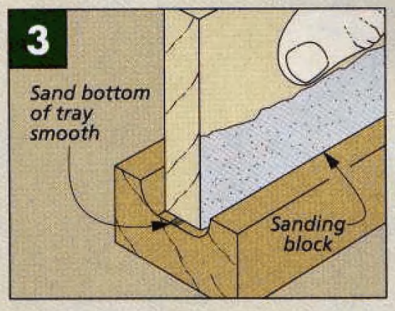

Routing A Stopped Chamfer

The trick to routing the stopped chamfers on the tool chest (page 32) is starting and stopping at the right spots. I wanted the ends of the chamfer to line up with the panels in the doors, like you see in the photo. The drawing on the right shows how I did this.

I used two stop blocks on the fence of my router table. They determine the start and stop points for the chamfer. To start the cut, the glued-up door assembly of the tool chest rests against the right stop block. Then pivot it into the spinning bit and rout to the left. When it contacts the left stop block, you're done.

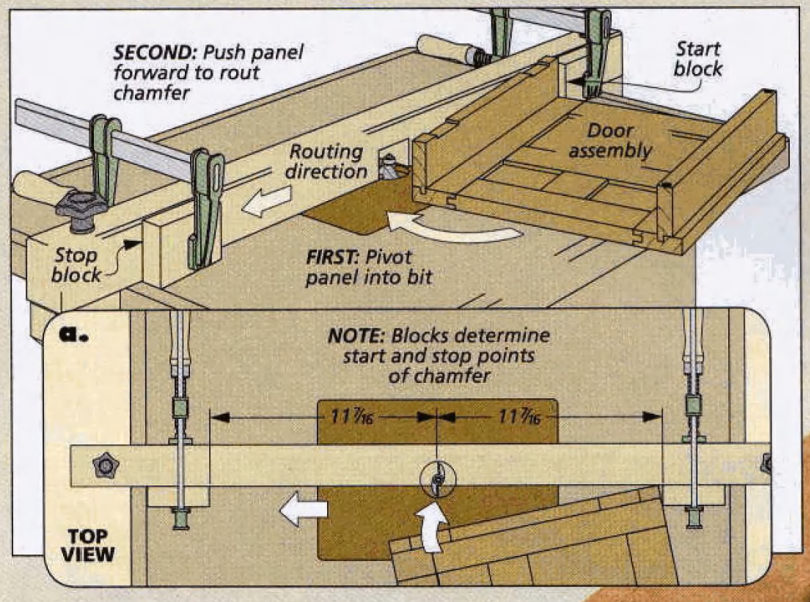

Shop-Made Bead Molding

The small bead molding on the tool chest on page 32 adds a classic detail. But creating such a small molding on the router table is hard to do safely and still get good results. The drawings below show the two steps I used to get around this problem. You'll find it a lot easier to work with extra-wide workpieces that are planed to final thickness. Then you can use a 3/32"-radius bullnose bit in the router table to shape both long edges (see Fig. 1).

Before you rip the beaded edges from the workpiece, go ahead and smooth the profile over with some sandpaper. The next thing to do is to rip the bead moldings free from the workpiece. Then it's just a matter of cutting them to length and fitting them into place on your project. W

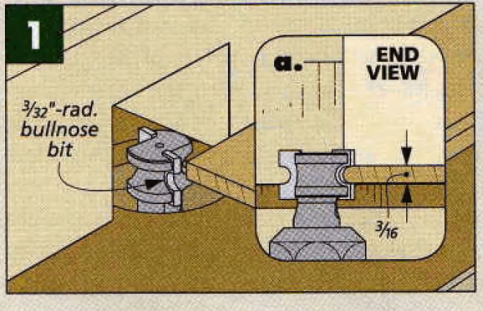

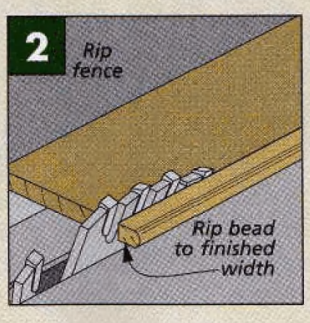

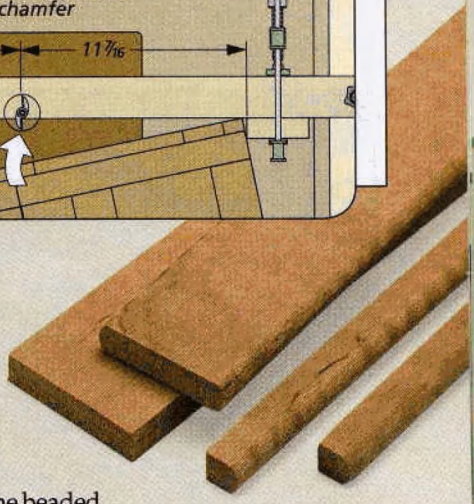

Small bead profiles are easy to make in two steps.

craftsman's Tool Chest

This beautiful, traditionally styled chest will make the perfect home for your most prized hand tools.

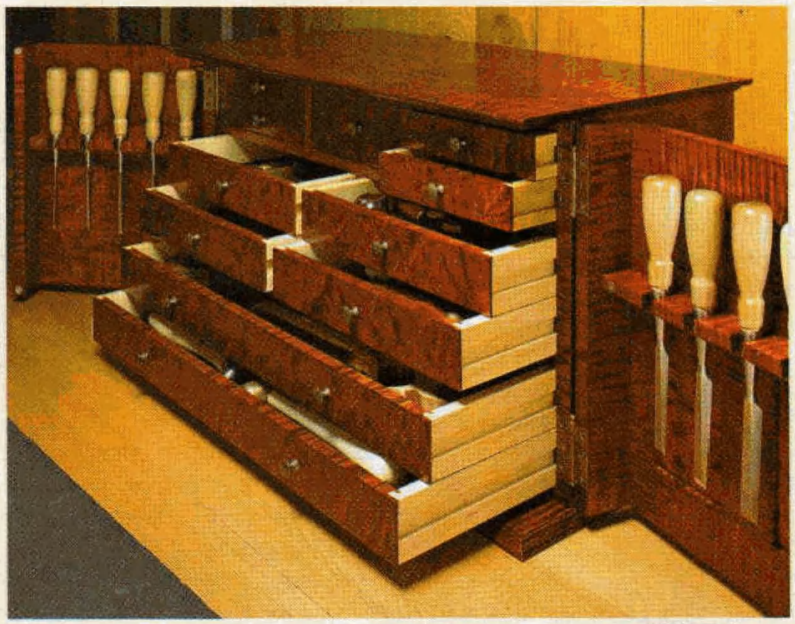

▲ You'll find the perfect spot for just about any tool in one of the eleven, leather-lined drawers. There's a size to fit almost anything.

Some of the hand tools I own are priceless. Maybe not to a collector, but they are to me. I've worked with them for so long they're more like old friends. They've certainly earned a special place in my shop and you might say this traditional tool chest is my answer.

One look will tell you this wasn't meant to be just a simple, utilitarian tool chest. Two things immediately catch your eye. The first is the wood — curly and birdseye maple enhanced by a rich, grain-popping dye. Now look past the wood and you start to notice the details. The frame and panel doors (and back) and all the delicate moldings give the chest a classic look.

But when you open the doors and look inside, you quickly realize that tool storage is the goal here. Behind each door you'll find a shallow recess, perfect for hanging a few often-used tools. And that's just the start. The chest holds eleven graduated drawers that provide a spot for just about any small tool.

And no doubt, other uses for this chest come to mind — jewelry, keepsakes, or a special collection. But whatever the contents, this project will hold them in style.

CONSTRUCTION DETAILS

OVERALL DIMENSIONS: 24⅝"W x 13⅝"D x 14⁹⁄₁₆"H

***NOTE:** Case back is frame and panel construction*

***NOTE:** All parts are solid wood except drawer bottoms*

Eleven graduated drawers provide versatile storage

Drawer runner

Shallow recess behind doors creates hanging tool storage

Drawers are lined with leather

Drawer side groove fits over runner mounted in case

Drawer fronts are birdseye maple

Drawers are built with locking rabbet joinery

Ogee with fillet on edges of top and bottom

***NOTE:** See page 49 for sources of hardware and supplies*

***NOTE:** Hinges, pulls, and chest lifts are burnished solid brass*

Large chest lifts make carrying easy

Knob with escutcheon plate

Door side stiles create shallow recess behind doors

Case constructed from curly maple

Door panels are birdseye maple

Cup type magnetic catches hold doors closed

Recess behind door holds chisel rack or other holders

Applied bead molding frames door panels

TOP SECTION VIEW

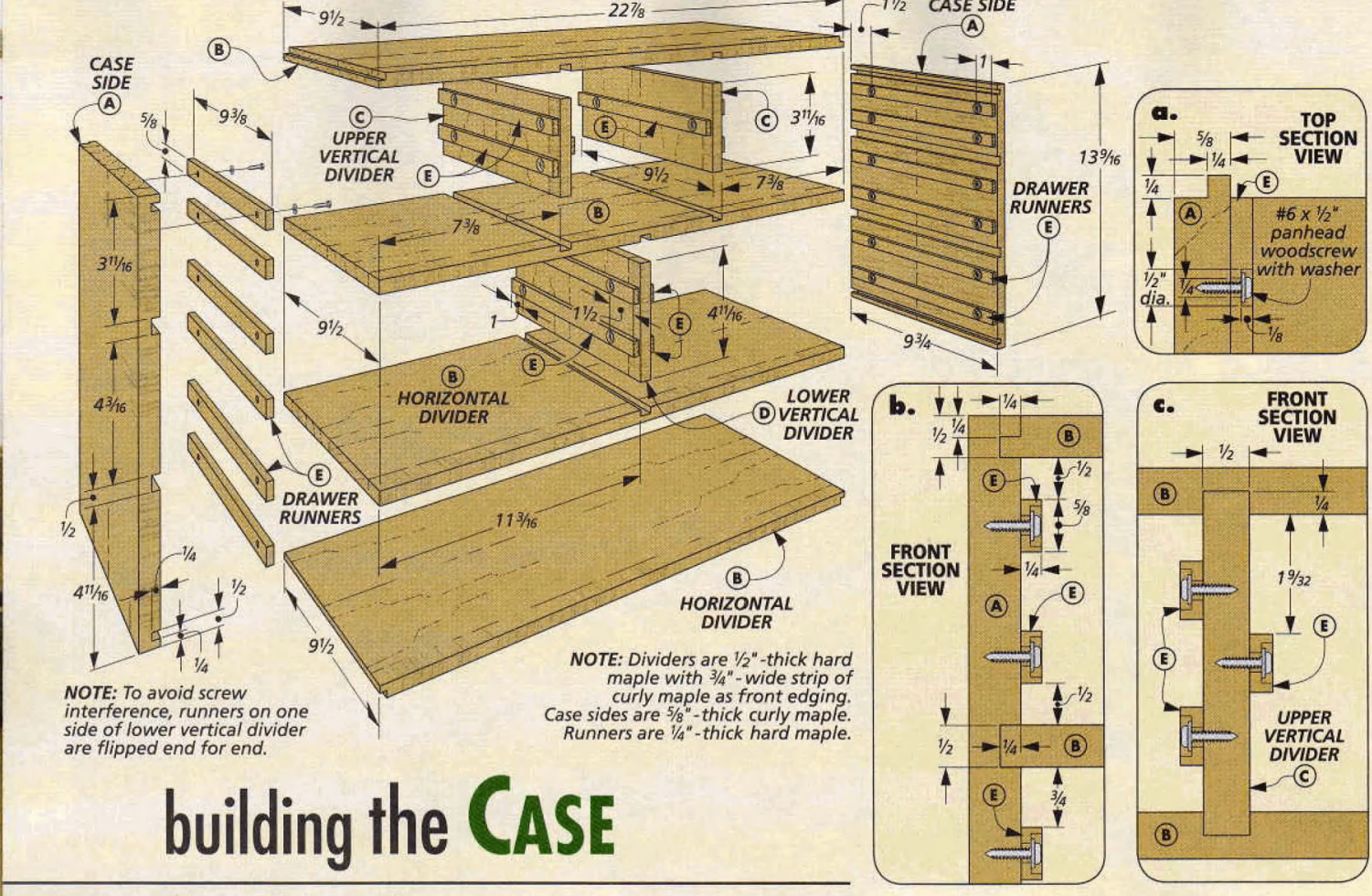

NOTE: To avoid screw interference, runners on one side of lower vertical divider are flipped end for end.

NOTE: Dividers are 1/2"-thick hard maple with 3/4"-wide strip of curly maple as front edging. Case sides are 5/8"-thick curly maple. Runners are 1/4"-thick hard maple.

building the CASE

Building the basic, solid-wood case and preparing it to hold the drawers is the place to get started. When you look at the drawing above, you'll see that it consists of two sides, four horizontal dividers, and three vertical dividers.

All but the upper center opening in the case will hold two "stacked" drawers. This works because the drawers slide on "side-mount" runners installed in the case.

GETTING STARTED. The first task is to glue up and size the panels for the sides and dividers. For the sides, I used some choice curly maple. But only the front edges of the dividers will show. So you can save some figured wood by "edging" these parts with narrow strips of curly maple.

Make a note that the sides are 5/8" thick, while the dividers are just 1/2" thick. And the two sides are 1/4" wider than the dividers. This extra width is used to create a tongue along the back edges that help hold the frame and panel back in place.

THE JOINERY. With the panels cut to size, you can start on the joinery. This is all pretty straightforward so

How-To: Case Joinery

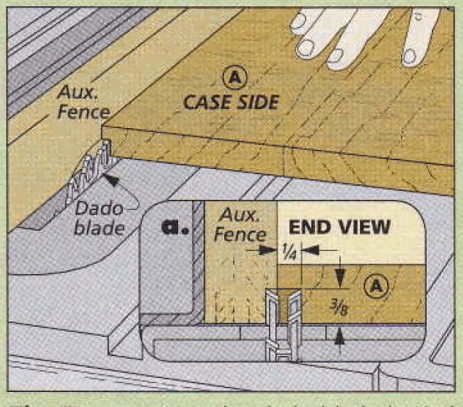

The Tongue. *I used a dado blade buried in an auxiliary rip fence to form the tongue on the back edge of the case sides.*

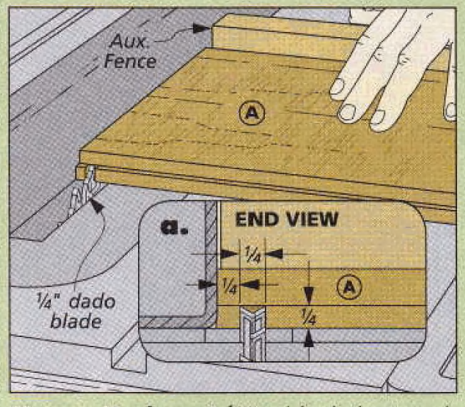

Narrow Dadoes. *A 1/4"-wide dado at each end of the side panels will capture the tongues on the top and bottom dividers.*

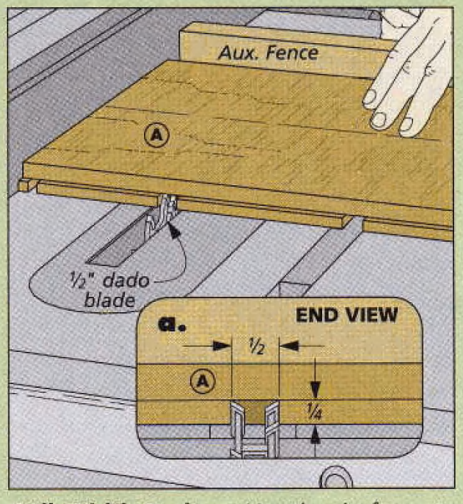

Full-Width Dadoes. *Use the rip fence to accurately position the wider dadoes in the sides and horizontal dividers.*

I'll just offer a short summary. The fine points are shown in the box at the bottom of the opposite page.

The tongue along the back edge of the sides comes first. This is formed along on the inside edges of the sides (detail 'a' at left).

Next comes the case joinery. The upper and lower horizontal dividers are joined to the sides with a tongue and dado (detail 'b'). This will start you off with a very rigid "box". The two remaining horizontal dividers and the vertical dividers fit into full-width dadoes. The key here is to make sure all the joinery is spaced accurately and aligned from side to side and top to bottom.

DRAWER RUNNERS. Next, before assembling the case, you'll need to make and install the drawer runners. The openings are too small to do this after the case is glued together.

There are 22 identical runners to install — two per drawer. Centered grooves cut in the sides of the drawers will fit over the runners. The illustrations at right show how to make and install the runners. But a little explanation will help.

When I made the runners, I gave myself some "wiggle room" by drilling oversized counterbores and screw holes. This adjustability makes fitting the drawers easier.

Accurately positioning the runners is the real challenge here. My solution was to dry-assemble the case pieces and then use a set of spacers to take any guesswork out of this process. It worked great.

The front ends of the runners should sit ⅛" back from the front edges of the case. As you'll see later, the drawer fronts will conceal them and act as drawer stops.

One final thing. The upper, center opening holds one drawer. So it only needs one set of runners.

ASSEMBLY. With the drawer runners in place, you can start putting the pieces together. First, I assembled the two upper horizontal and vertical dividers. Then I added the lower vertical divider and horizontal divider, using the sides to keep things square. Last come the two sides and the bottom divider.

How-To: Make and Install the Runners

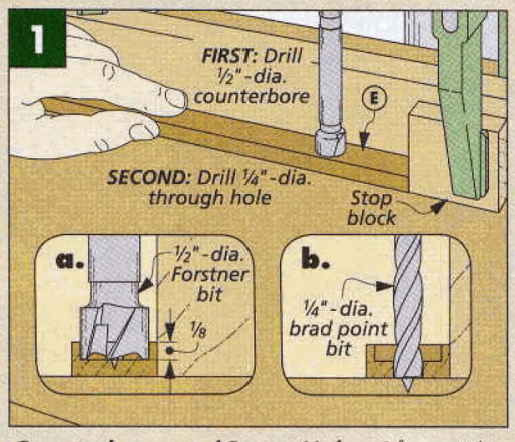

Counterbores and Screw Holes. *After cutting the runners to size, first drill a shallow counterbore, followed by an oversized shank hole.*

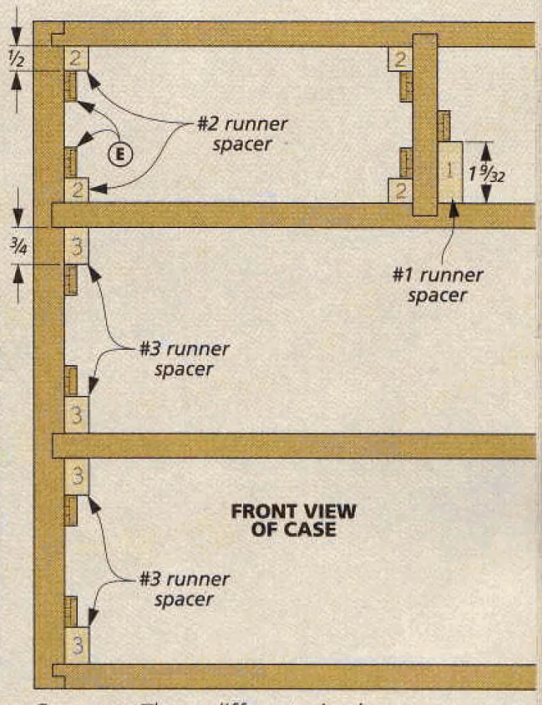

Spacers. *Three different sized spacers allow you to easily and accurately position the runners in the case.*

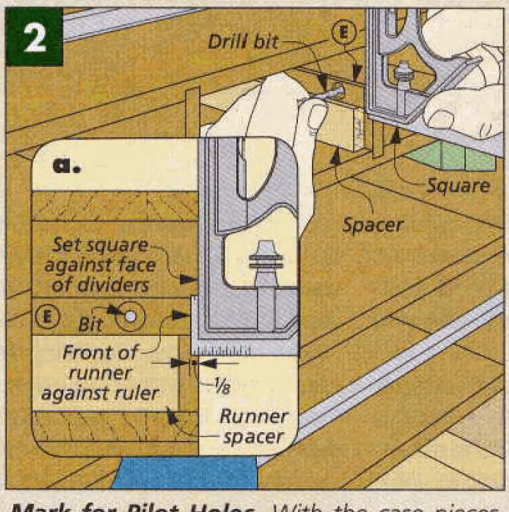

Mark for Pilot Holes. *With the case pieces dry-assembled, use spacers to position the runners and mark the location for pilot holes.*

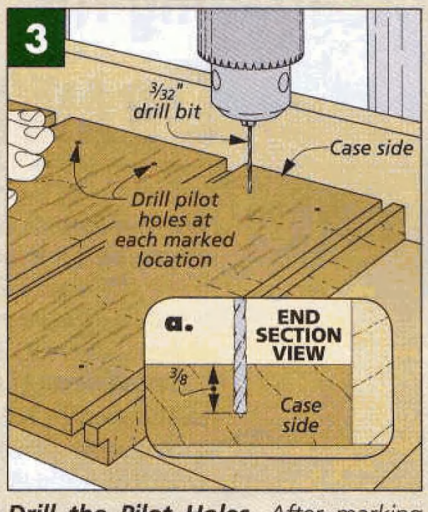

Drill the Pilot Holes. *After marking the locations for the pilot holes, take the case apart and drill them.*

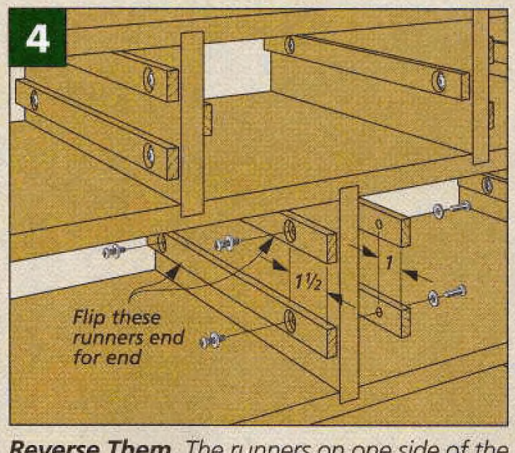

Reverse Them. *The runners on one side of the lower vertical divider need to be reversed so the screws won't interfere with each other.*

▲ It's easier to screw the runners in place before the case is assembled. You can still adjust them later.

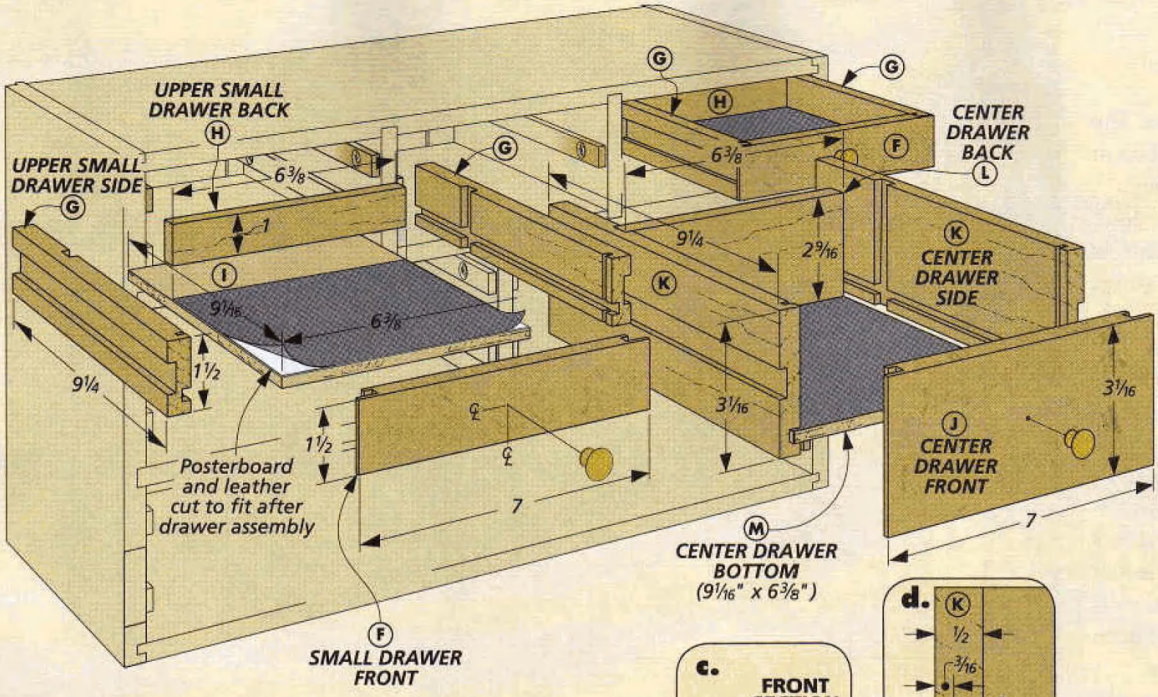

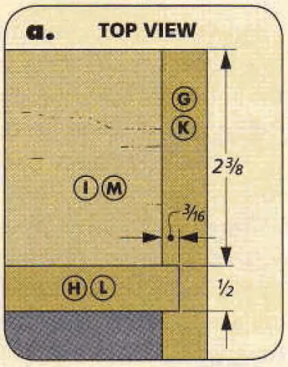

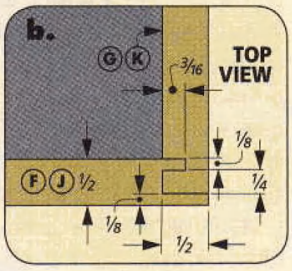

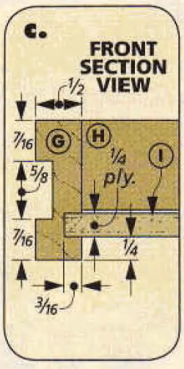

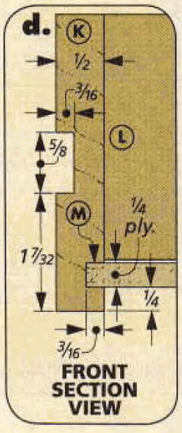

making the DRAWERS

Now, before making and adding the case back, I began building the drawers. This makes it much easier to fit the drawers and make any adjustments to the runners.

ELEVEN DRAWERS. All but the upper middle opening hold two drawers — or eleven drawers total. There are four different sizes and two different types. This might seem like a lot of work, but there are a couple of things in your favor. Since, for the most part, the drawers are in sets, there's a lot of duplication. And all the joinery is pretty much identical and easy to cut on the table saw. So once the pieces for the drawers are sized, you'll be setting up for a lot of repetitive cuts and the job will go pretty quickly.

LOTS OF PIECES. To get started, you'll need to cut the parts to size. This is a lot of parts to keep straight, but being to able set up and cut all the joinery at once makes it worthwhile. I labeled everything clearly to prevent any mixups. And note that the top row of drawers is built a little differently, so you'll need to adjust the sizes of a few pieces.

THE DRAWER JOINERY. Now you can start on the joinery. The fronts and sides of all the drawers are joined with a locking rabbet (see detail 'b' above). It's a very solid joint for small drawers like these. The drawings at the bottom of the page take you through the process.

How-To: Drawer Joinery

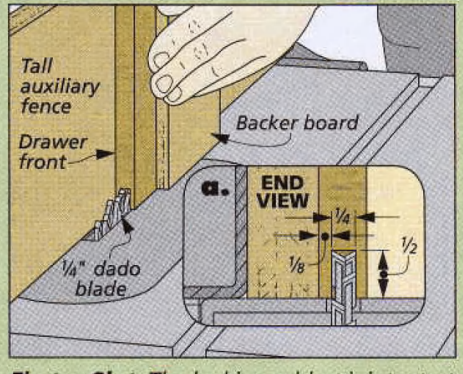

First, a Slot. *The locking rabbet joints start by using a dado blade to cut a centered slot in each end of the fronts and backs.*

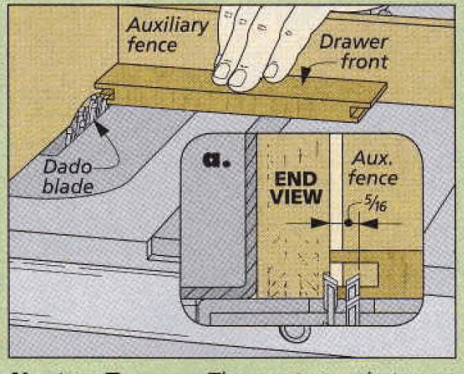

Next, a Tongue. *The next step is to cut away part of the inside edge of the slot to create a short tongue.*

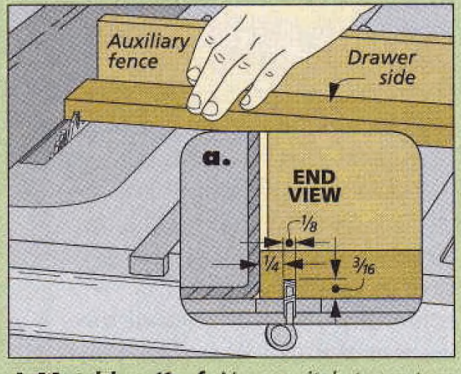

A Matching Kerf. *Now switch to a standard blade to cut a kerf in the sides to fit snugly over the tongues.*

TWO VARIATIONS. At the back of the drawers you'll find two joinery variations. Most of the drawers use the same locking rabbet used at the front (detail 'b' at right). But the three drawers across the top are a little different for a good reason.

When you open any of these drawers, the overhanging top you'll add later limits access to whatever is stored at the back. So, I decided to eliminate this "lost" space. Full-length sides still support the drawers when opened, but the back fits into a recessed dado, as in detail 'a' at left.

The plywood bottoms of all the drawers fit into grooves cut into the parts. But the bottoms of the upper row are full depth and fit under the backs (detail 'a' at left).

RUNNER GROOVES. Before assembling the drawers, there's a bit more work to do. As you now know, all the drawers slide on the runners installed in the case. The catch is that you don't want the grooves in the drawer sides to extend through the fronts of the drawers. So you'll want to cut them before gluing the drawers together. After assembly, you can complete the grooves through the drawer backs.

The final two drawings below show what needs to be done. Just remember that the ⅝"-wide grooves are centered across the width of the different drawer sides. And you want the sides to slide easily over the runners but without too much play.

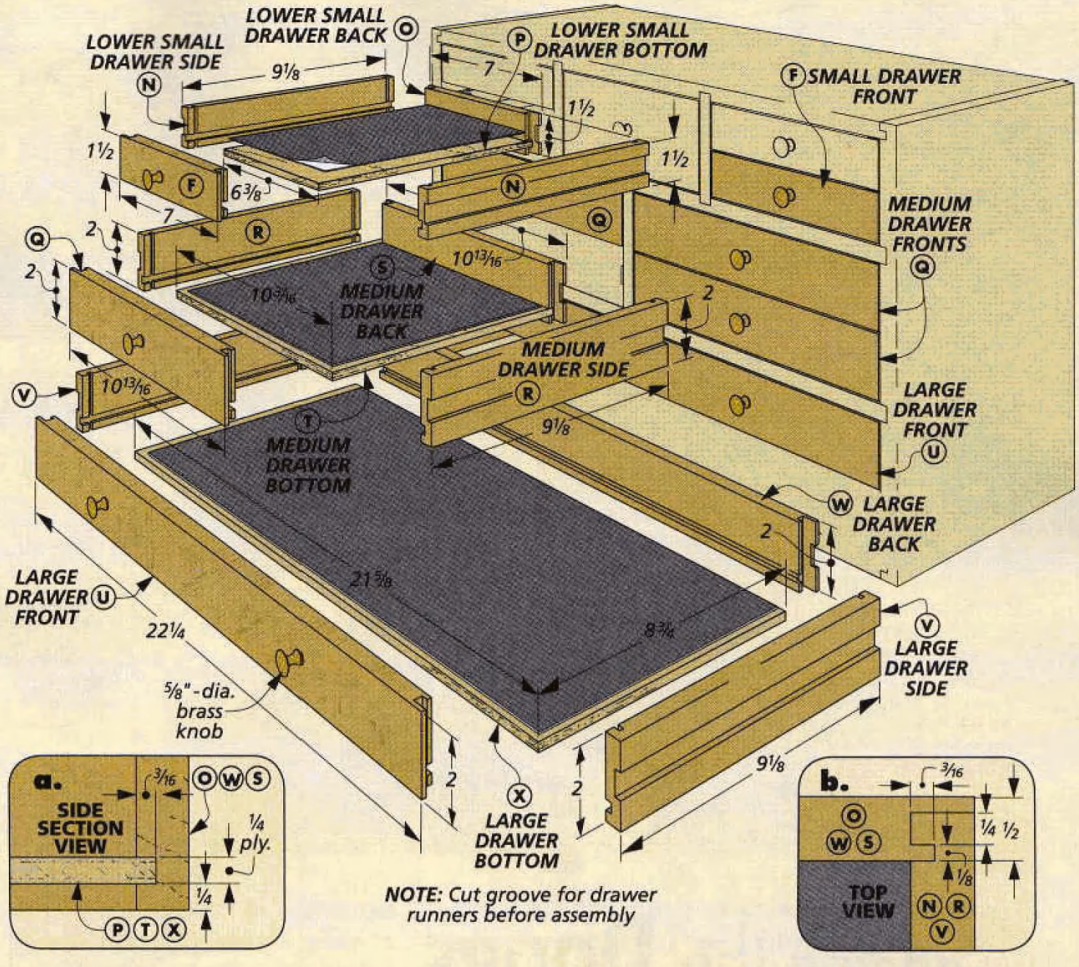

ASSEMBLY. Once the runner grooves are completed and the bottoms cut to size, you can start gluing the pieces together. At this stage you want to be pretty particular. If you make certain the drawers are square and sit flat, you'll have a much easier time fine-tuning the fit. And when all the drawers are assembled, turn to page 50 to find some pointers on adjusting the runners for a perfect fit.

DRAWER LINERS. Lining each of the drawers with leather is the perfect final touch. I simply cut a piece of poster board to fit each drawer and then glued an oversized piece of leather to it with spray adhesive. After trimming the leather to size, you just pop the liner into place.

Drawer Grooves

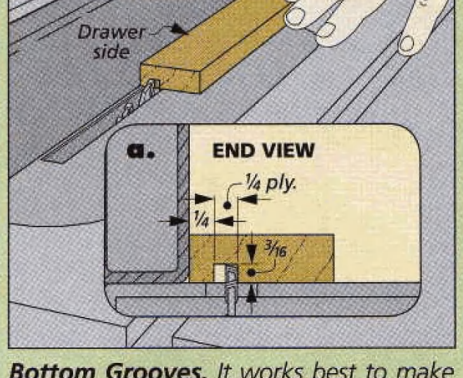

Bottom Grooves. *It works best to make several passes with a standard blade to size the grooves for the plywood bottoms.*

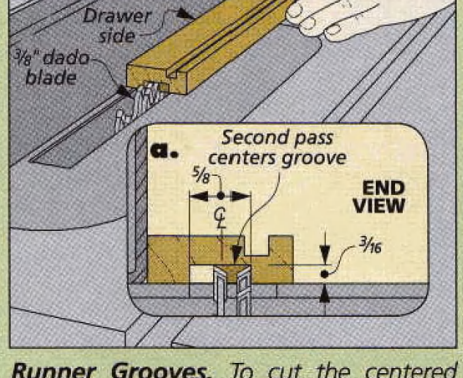

Runner Grooves. *To cut the centered runner grooves, flip the workpiece end for end between passes.*

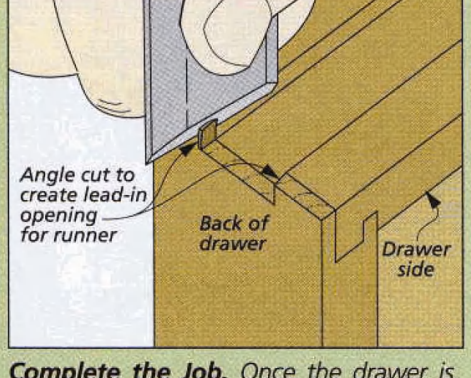

Complete the Job. *Once the drawer is assembled, you'll need to cut through the back to complete the runner groove.*

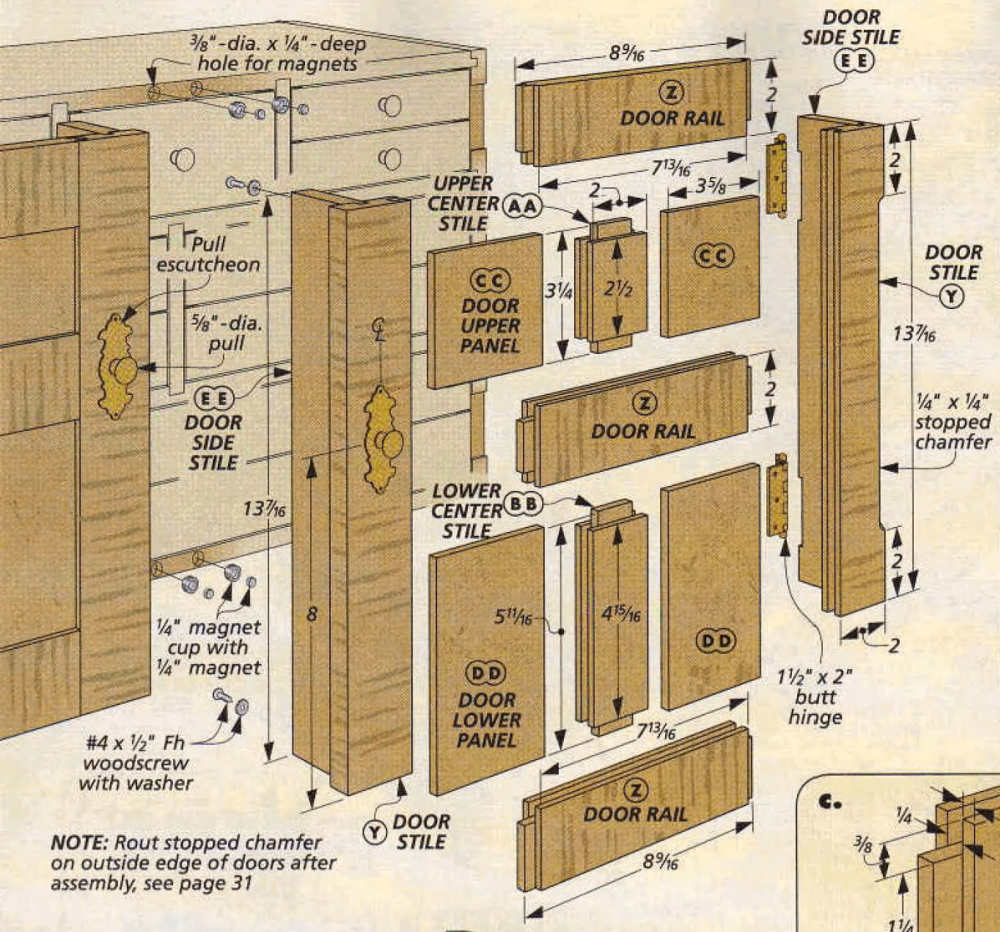

NOTE: *Rout stopped chamfer on outside edge of doors after assembly, see page 31*

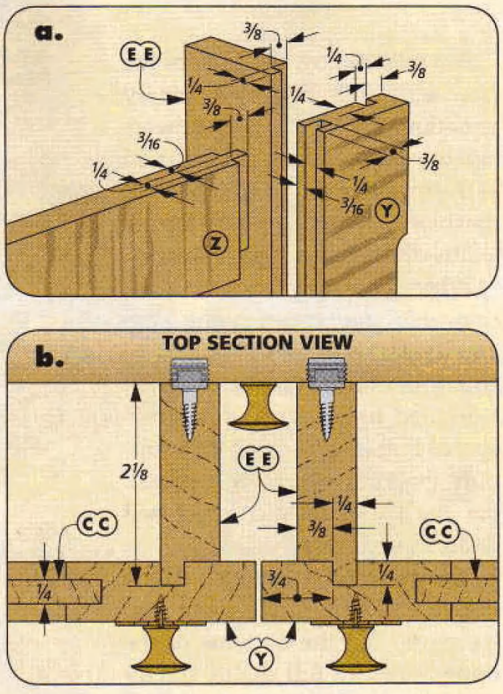

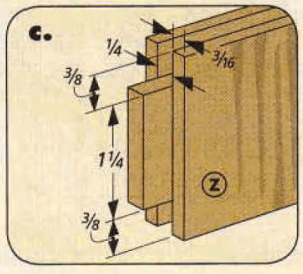

adding the DOORS

With all the drawers fitted, you can start on the two frame and panel doors. (I emphasize "start" because you'll add some bead molding to the doors later.) Tackling this step before the case top and bottom are added makes installing the hinges and catches a much easier job.

A DIFFERENT DESIGN. First let's look at the unique design of the doors. As you can see above, the two mirror-image doors have a U-shape. This is created by attaching an extra "side stile" to the back of each door stile. The purpose of this design is to space the doors away from the drawers and to create a handy storage recess behind them. You'll see how I put this "bonus" space to work on the following page.

BUILDING THE DOORS. If you look at the drawings above, you'll notice there are a number of pieces to each door — stiles, rails, and panels. But the good news is that the simple stub tenon and groove joinery I used makes the work go quicker than you might think.

CUT TO SIZE. To begin, the pieces for the basic frames can be cut to size from 5/8"-thick curly maple stock. I sized the doors 1/8" less than the height of the case. This gives you

How-To: Stub Tenon and Groove

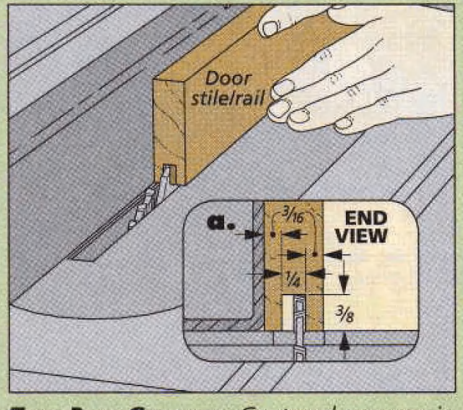

Two-Pass Grooves. *Centered grooves in the stiles and rails can be cut by flipping the workpiece end for end between passes.*

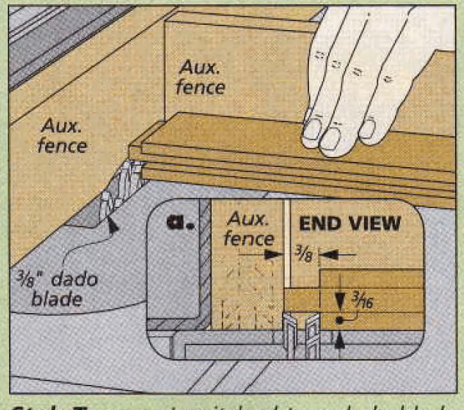

Stub Tenons. *I switched to a dado blade buried in an auxiliary rip fence to cut the stub tenons on the door pieces.*

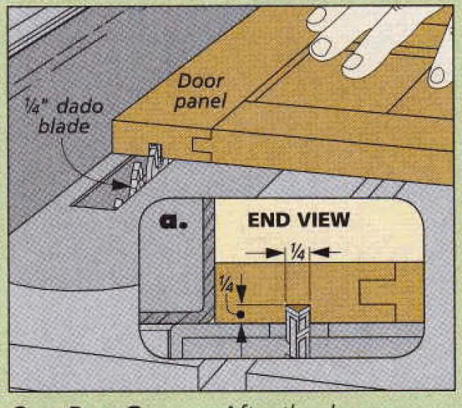

One-Pass Groove. *After the doors are assembled, use a dado blade to cut grooves to hold the tongues on the side stiles.*

1/16" clearance at the top and bottom. The doors are flush to the sides of the case and there's a 1/16" gap between them.

THE JOINERY. Now comes some simple table saw joinery. The box at the bottom of the opposite page shows all the details.

First, you're going to cut 1/4"-wide centered grooves (detail 'a'). Note that some pieces have a groove on one edge and some on both edges. Once you've completed the grooves, the next step is to switch to a dado blade and start cutting stub tenons to match the grooves (detail 'c'). The key here is to work toward a nice snug fit.

SMALL PANELS. That's it for the joinery. But before assembling the frames, you need door panels. Like the drawer fronts, I cut these from birdseye maple. And I left a little side-to-side wiggle room for expansion and contraction.

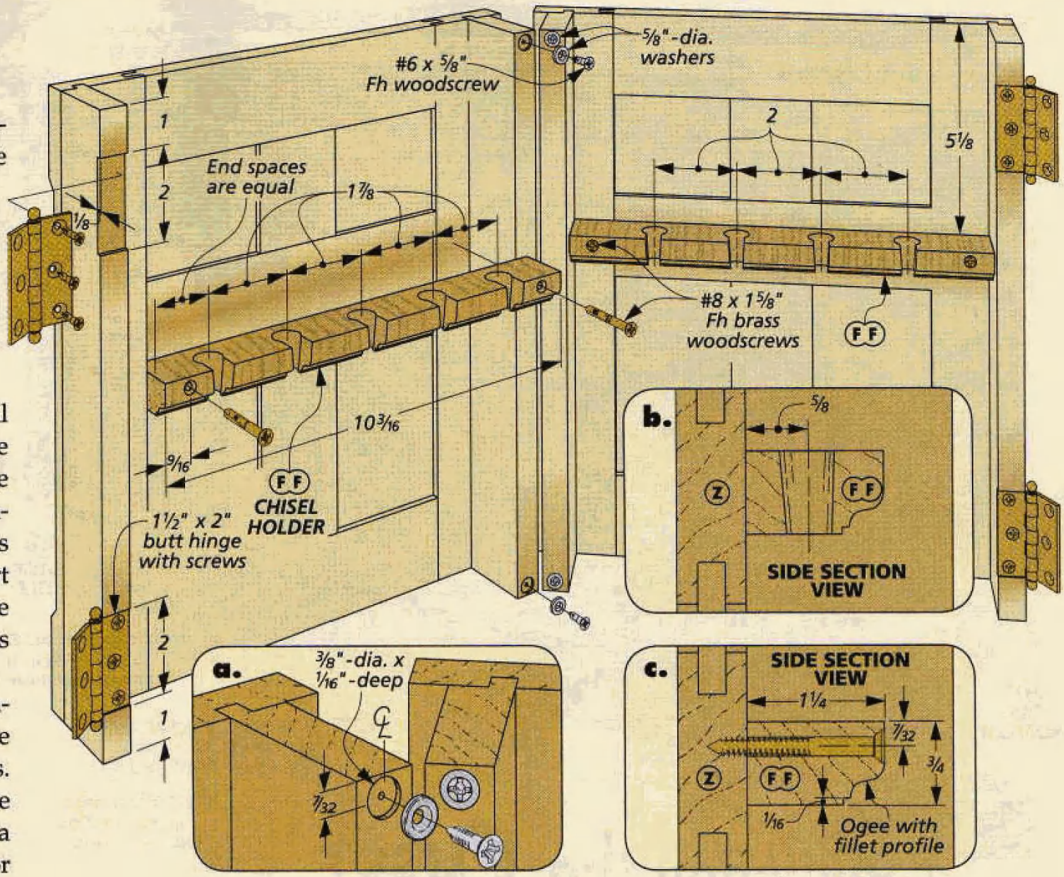

SIDE STILES. Once the basic frame and panel assemblies are glued up, you can add the side stiles. These are attached to the door stiles with a tongue and groove, as in details 'a' and 'b' on the opposite page.

The outer side stiles should fit flush with the edges of the door stiles. But the inner side stiles are recessed from the edges. This creates clearance over the center drawer pull and prevents the two doors from binding when opened.

INSTALL THE DOORS. After adding the side stiles, the doors are ready to install on the case. For this, I used butt hinges mortised into both the case and the door side stiles. Finally, with the doors in place, I added a pull and escutcheon and a pair of cup-type magnetic catches to each. The cup and magnet are counterbored into the top and bottom divider and the mating washer is set into the edge of the door side stiles, as shown in detail 'a' above.

CUSTOM CHISEL RACK. It didn't take me long to come up with a use for the recesses on the inside of the doors. It's the perfect spot for a rack, or racks, to hold a set of chisels. The racks I came up with are designed to hold my set of tapered socket chisels. The general process I used to make them is shown in the box below. For other storage options, refer to page 41.

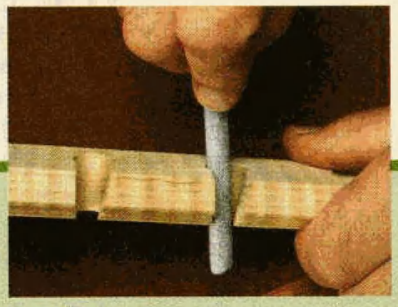

▲ After routing an ogee profile on the edge, use a dowel wrapped in sandpaper to sand the holes.

A Custom-Fit Chisel Rack

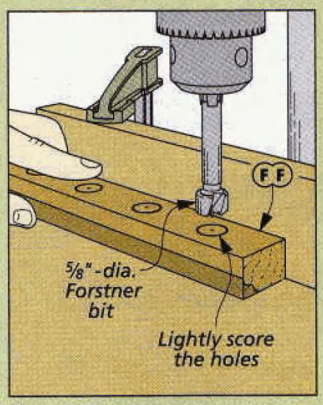

First, "Score." *Start the tapered hole by scoring the top surface with a Forstner bit.*

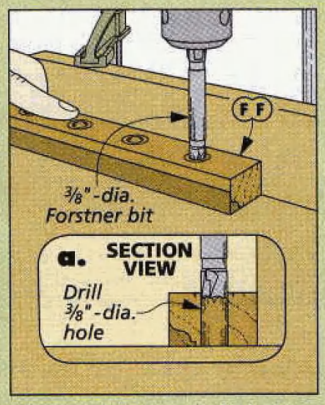

Now, a Through Hole. *Use the scored outline to center a smaller through hole.*

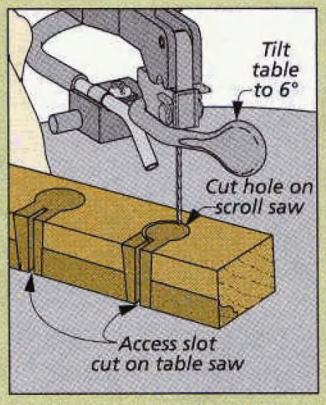

A Tapered Hole. *Next, I tilted the scroll saw table and cut around the scored hole.*

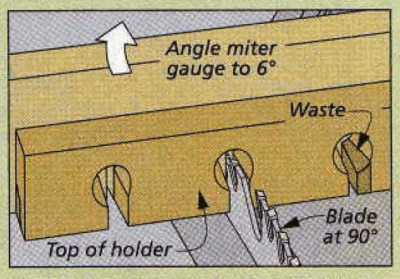

Finally, a Tapered Slot. *Finish the job at the table saw by cutting a tapered slot into each hole.*

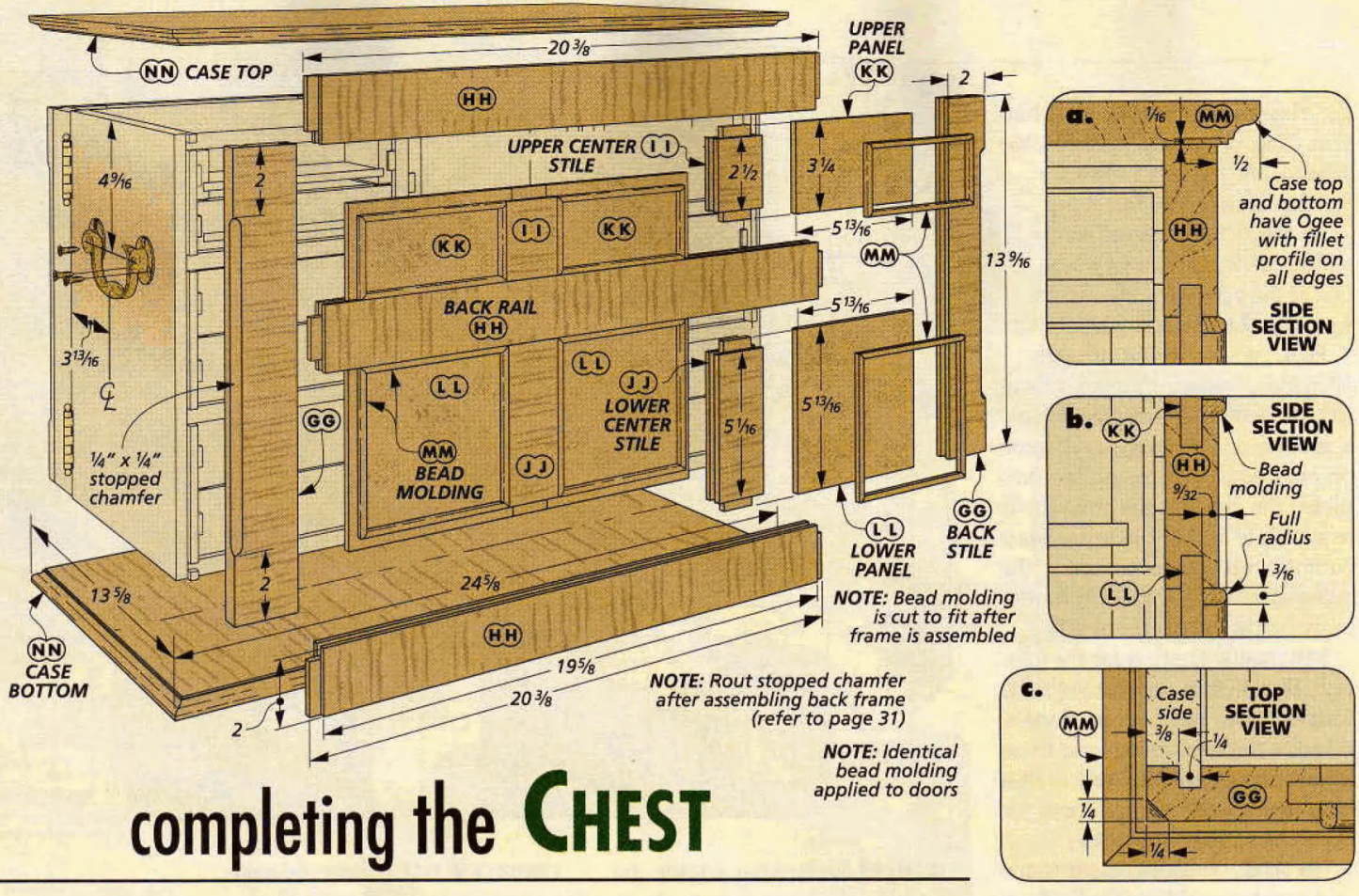

completing the CHEST

At this point, the tool chest is really taking shape, but there are a few important parts to add. But it's all pretty straightforward work.

THE BACK. First you need to put a back on the case. As you can see above, the frame and panel back mirrors the construction of the doors. The frame is built with stub tenon and groove joinery using curly and birdseye maple. And then once assembled, it's fitted to the case by cutting grooves in the stiles that mate with the tongues on the case sides.

BEAD MOLDING. One of my favorite details on this project is the bead molding that frames the panels. And now is the time to make it and and add it to both the back frame and the two doors.

You'll find details on making this small molding on page 31. And with the bead molding in hand, you simply miter pieces to fit the openings and glue it to the frames.

TOP AND BOTTOM. Now, only a top and bottom for the chest are missing. As you can see above, these are identical panels glued up from ½"-thick curly maple stock. I routed an ogee with fillet on all the edges and then glued the panels to the case with molded edges facing one another. With the doors in place, you should have an even overhang all around.

FINISH UP. After installing the two handles, I carried the chest to the finishing room. Here I applied a grain-popping water-based dye, followed by a coat of wiping varnish and several coats of water-based finish. And while the finish was drying, I contemplated how I would fill up my new tool chest.

Cutting Diagram

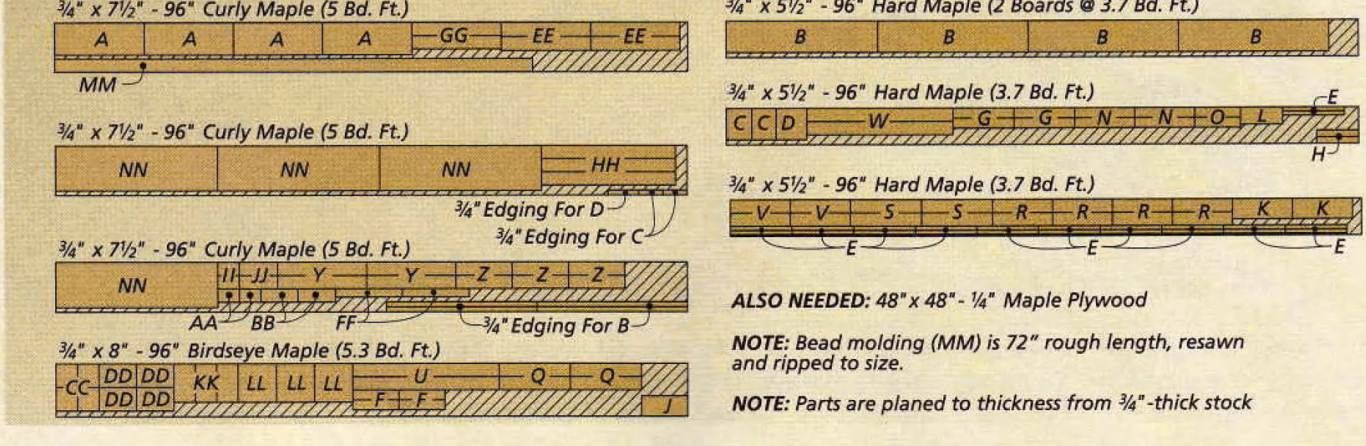

ALSO NEEDED: *48" x 48" - 1/4" Maple Plywood*

NOTE: *Bead molding (MM) is 72" rough length, resawn and ripped to size.*

NOTE: *Parts are planed to thickness from 3/4"-thick stock*

Door Storage Options

While working on this project, I couldn't help but think of all the different options for putting it to use — both for storing tools as well as other personal treasures. A couple of ideas are shown in the drawings at right.

How about a stylish jewelry chest? The shallow drawers are perfect. And adding a leather-lined back panel to the doors provides a place for pendants and necklaces.

And if tools are your choice, a similar modification will provide custom hanging storage for the ones you want close at hand. You'll find all the details on adding door panels for hanging storage at our website.

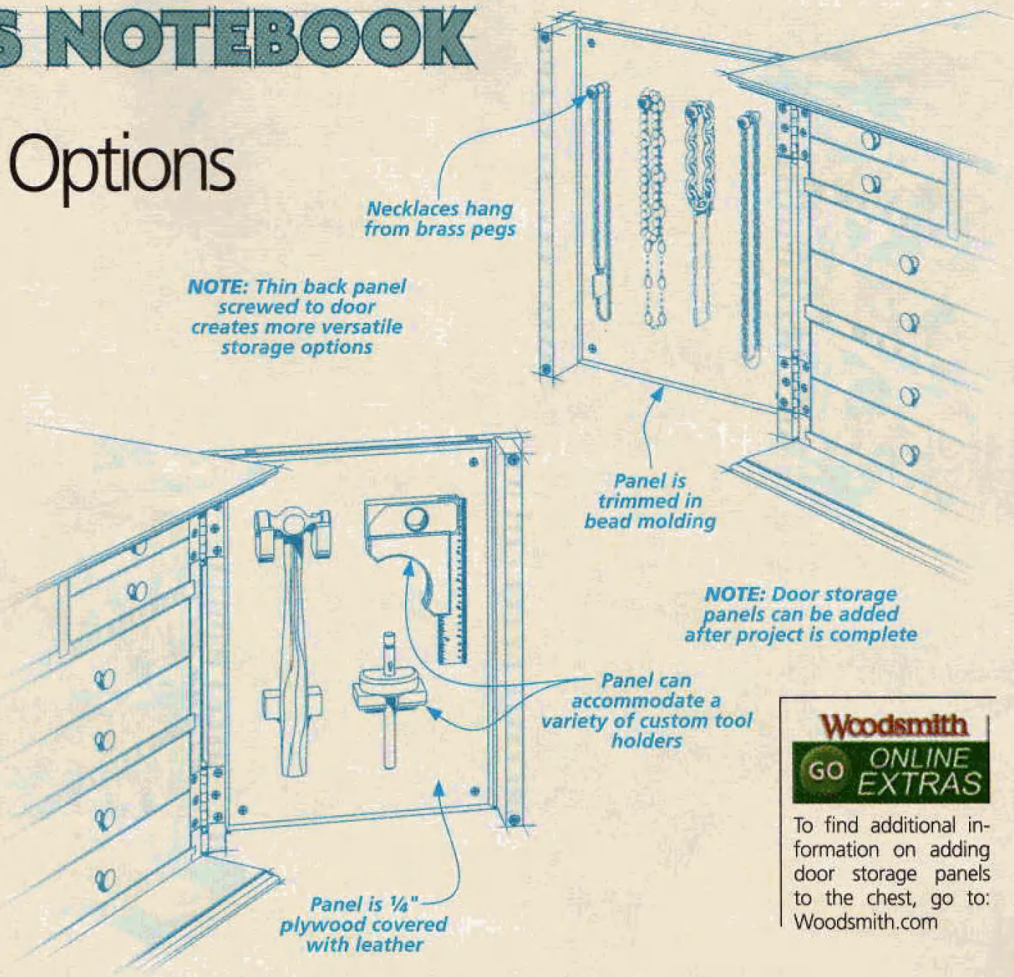

Woodsmith GO ONLINE EXTRAS

To find additional information on adding door storage panels to the chest, go to: Woodsmith.com

Materials & Supplies

A	Case Sides (2)	5/8 x 9 3/4 - 13 9/16
B	Horizontal Dividers (4)	1/2 x 9 1/2 - 22 7/8
C	Upper Vertical Dividers (2)	1/2 x 9 1/2 - 3 11/16
D	Lower Vertical Divider (1)	1/2 x 9 1/2 - 4 11/16
E	Drawer Runners (22)	5/8 x 1/4 - 9 3/8
F	Small Drawer Fronts (4)	1/2 x 1 1/2 - 7
G	Upper Small Drawer Sides (4)	1/2 x 1 1/2 - 9 1/4
H	Upper Small Drawer Backs (2)	1/2 x 1 - 6 3/8
I	Upper Small Drawer Bottoms (2)	1/4 ply. - 9 1/16 x 6 3/8
J	Center Drawer Front (1)	1/2 x 3 1/16 - 7
K	Center Drawer Sides (2)	1/2 x 3 1/16 - 9 1/4
L	Center Drawer Back (1)	1/2 x 2 9/16 - 6 3/8
M	Center Drawer Bottom (1)	1/4 ply. - 9 1/16 x 6 3/8
N	Lower Small Drawer Sides (4)	1/2 x 1 1/2 - 9 1/8
O	Lower Small Drawer Backs (2)	1/2 x 1 1/2 - 7
P	Lower Small Drawer Bottoms (2)	1/4 ply. - 8 3/4 x 6 3/8
Q	Medium Drawer Fronts (4)	1/2 x 2 - 10 13/16
R	Medium Drawer Sides (8)	1/2 x 2 - 9 1/8
S	Medium Drawer Backs (4)	1/2 x 2 - 10 13/16
T	Medium Drawer Bottoms (4)	1/4 ply. - 8 3/4 x 10 3/16
U	Large Drawer Fronts (2)	1/2 x 2 - 22 1/4
V	Large Drawer Sides (4)	1/2 x 2 - 9 1/8
W	Large Drawer Backs (2)	1/2 x 2 - 22 1/4
X	Large Drawer Bottoms (2)	1/4 ply. - 8 3/4 x 21 5/8
Y	Door Stiles (4)	5/8 x 2 - 13 7/16
Z	Door Rails (6)	5/8 x 2 - 8 9/16
AA	Door Upper Center Stiles (2)	5/8 x 2 - 3 1/4
BB	Door Lower Center Stiles (2)	5/8 x 2 - 5 11/16
CC	Door Upper Panels (4)	1/4 x 3 5/8 - 3 1/4
DD	Door Lower Panels (4)	1/4 x 3 5/8 - 5 11/16
EE	Door Side Stiles (4)	5/8 x 2 1/8 - 13 7/16
FF	Chisel Racks (2)	3/4 x 1 1/4 - 10 3/16
GG	Back Stiles (2)	5/8 x 2 - 13 9/16
HH	Back Rails (3)	5/8 x 2 - 20 3/8
II	Back Upper Center Stiles (2)	5/8 x 2 - 3 1/4
JJ	Back Lower Center Stiles (2)	5/8 x 2 - 5 13/16
KK	Back Upper Panels (3)	1/4 x 5 13/16 - 3 1/4
LL	Back Lower Panels (3)	1/4 x 5 13/16 - 5 13/16
MM	Bead Molding (4)	3/16 x 1/4 - 72 rgh.
NN	Case Top/Bottom (2)	1/2 x 13 5/8 - 24 5/8

- (13) 5/8"-dia. Brass Knobs
- (2 pr.) 1 1/2" x 2" Brass Butt Hinges
- (2) 5/8"-dia. Brass Knobs/Escutcheon
- (4) 1/4"-dia. Rare-Earth Magnets
- (4) 1/4" Magnet Cups
- (4) 3/8"-dia. Magnet Washers
- (4) #4 x 1/2" Fh Woodscrews
- (2) 6" Chest Lifts
- (44) #6 x 1/2" Ph Woodscrews
- (44) #6 Flat Washers
- (4) #8 x 1 5/8" Brass Fh Woodscrews

tips for trouble-free Resawing

Cutting book-matched pieces or slicing thin veneer is a breeze with a well-tuned saw and these easy solutions.

▲ A well-tuned band saw will help you make straight, square, and consistent cuts even when resawing stock into thin pieces.

Resawing on the band saw seems like a simple, straightforward technique on the surface — you simply stand the workpiece on edge and run it through the saw. But there's more to it than that. If your saw isn't set up properly, there are a few problems that will almost certainly pop up and make getting the results you want a challenge. Here are some easy fixes to a few of the most common problems. They'll get you on your way to successful resawing.

THE RIGHT BLADE. The first step toward getting a good cut is choosing the right blade for resawing. For most 14" band saws, a ½", 4-TPI, hook-toothed blade (like the one shown in the lower left photo) is the right answer.

A BETTER FENCE. After you've installed the right blade, you'll also want to add an auxiliary fence — one that's tall enough to support wide stock. Then it's usually just a matter of fine-tuning the rest of your saw to get accurate cuts.

▲ Success begins with the correct blade. Choose a 4-TPI blade with deep gullets for chip removal.

Flatten Barrel Cuts

One common resawing problem is known as a barrel cut. It's a rounded cut that leaves a concave and a convex face on the sides, as shown in the left illustration below. Fortunately, it's an easy problem to fix.

The first thing to do is check blade tension. Instead of relying on your saw's tension indicator (which is seldom accurate), just push the blade with your finger, as shown below. It shouldn't move more than ¼".

The next thing to do is make sure the upper blade guide assembly is as close to the workpiece as possible. I like to keep it about ½" above the cut. This way, the blade is less likely to deflect inside the workpiece.

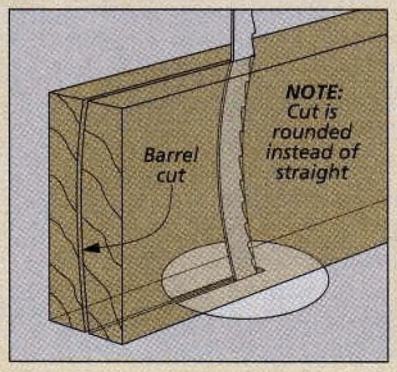

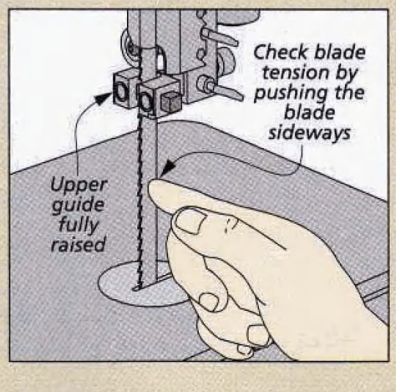

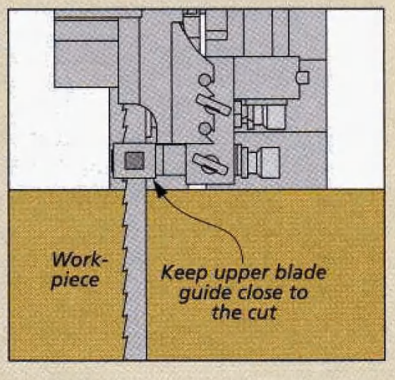

Square Up Angled Cuts

Another problem is keeping the cut pieces square. That is, making sure the thickness is consistent from top to bottom, and not wedge-shaped, as in the left illustration below. If the pieces aren't even, your stock wasn't square to the blade as you made the cut. This is normally caused by the table and fence not being perpendicular to the blade.

The first thing to do is take a look at both the upper and lower blade guides. If they're not properly aligned, as in the illustration below, they can force the blade out of square. You can set the guide blocks by loosening the screws that hold them and adjust as needed.

Finally, you'll need to pull out a square and adjust the table to make sure it's set 90° to the blade. (Usually there are adjustment mechanisms below the table and a set screw stop.) Then check the fence.

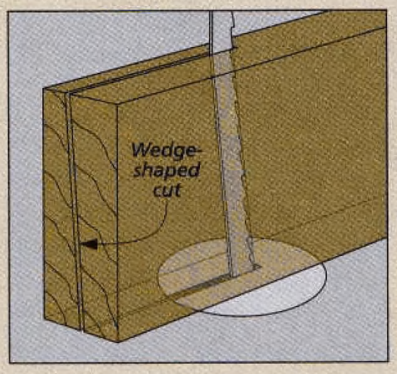

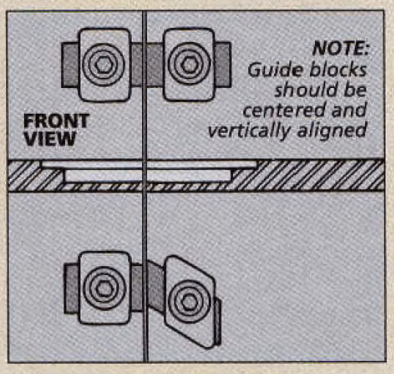

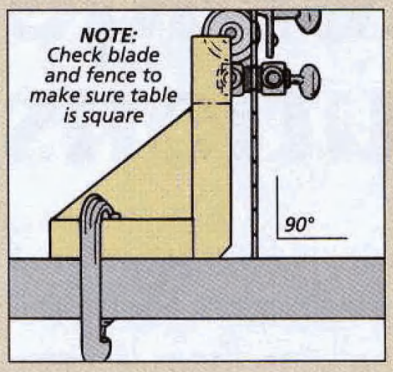

Prevent Blade Drift

A frequent source of frustration when resawing is blade drift. Even when everything else is set up properly, the blade can still wander off the cut line. This is caused by the set of the blade and how flat it sits on the tire. Fortunately, there's an easy solution to this problem.

All you need to do is determine the blade drift angle and then adjust the fence to match it.

To do this, just draw a line on the face of a board and make a straight cut, as shown in the drawing at right. When you get about halfway through the cut, turn the saw off and leave the board in position.

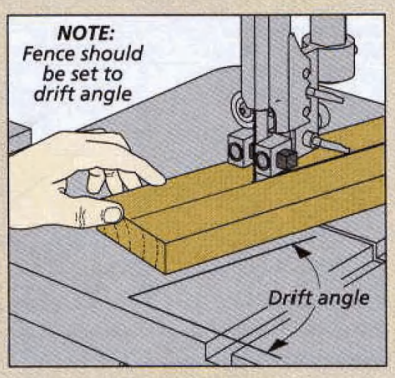

Now, mark the angle that produced a straight cut on the table. Then, all you need to do is set the fence parallel to the line and the saw will track straight on the mark.

Eliminate Burn Marks

Burn marks are usually the result of a dull blade that needs to be replaced. But sometimes pitch on the blade will cause a burn, too. If that's the case, a good cleaning is all that's needed.

You can also get burning from a blade without enough set (the alternating outward bending of the teeth). Too little set will cause burning by the friction created when the steel band behind the teeth rubs on the face of the freshly cut board, as shown in the top illustration at right. The only solution here is to replace the blade.

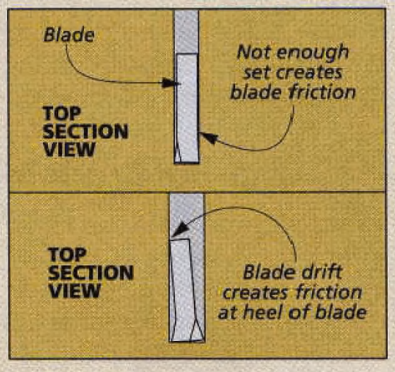

Blade drift, discussed above, can also cause wood to burn. The heel of the blade can rub on one side of the cut (lower drawing). Compensating for drift solves the problem. W

Shop Tip: Wedge Splitter

Sometimes, even when your saw is well-tuned, you can still run into a problem with the cut closing up around the blade and binding or causing the saw to stall. Most often, this is caused by internal stresses in the wood. It can also happen in wood that's still very wet or was improperly dried.

In either case, there's an easy answer. All you need to do is hold the cut open with a simple wedge, as shown in the drawing below. You can make a wedge from a piece of scrap. The only thing you need to be careful of is that you don't drive the wedge too far into the board and cause the face against the fence to bend and throw off the cut line.

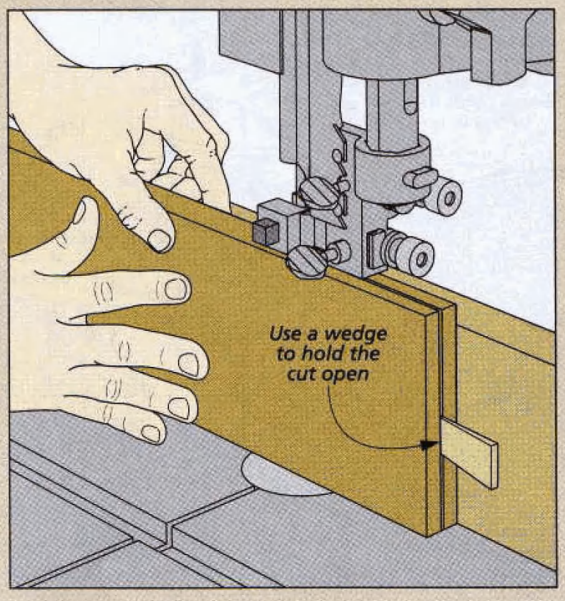

5 power tool Storage Solutions

Looking for a solution to storing power tools? You can keep them all close at hand with any of these quick and easy ideas.

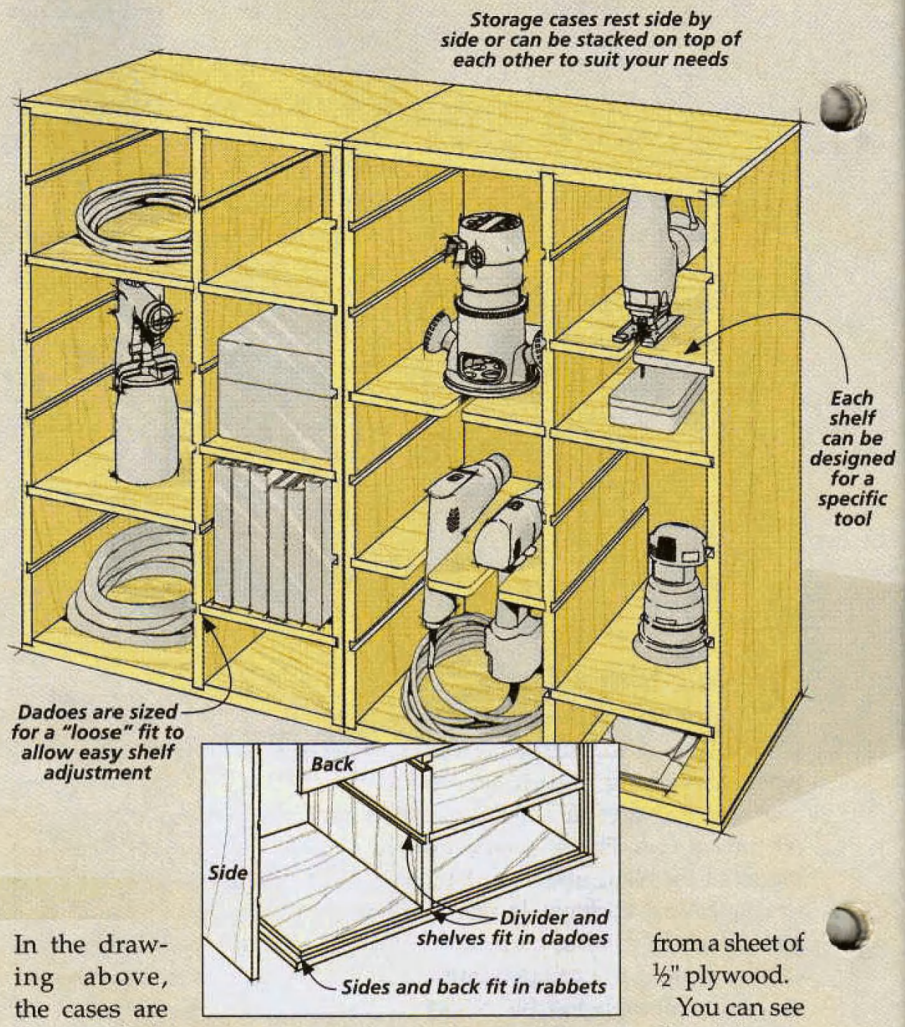

1 Tool Storage System

Portable power tools seem to accumulate like bugs around a bright light. And storing them all is a problem. It's too easy to pile them up on a shelf somewhere. Unfortunately, the power cords tend to get tangled up, creating a knotted mess.

To solve this, I built the tool storage system shown above. This system consists of two narrow cabinets with adjustable shelves.

In the drawing above, the cases are shown side by side. But you can just as easily stack them on top of one another. Either way, the shelves are customized to fit a wide range of tools and accessories.

All the parts you'll need for the two cases can be cut from two sheets of plywood. The main case consists of parts cut from a sheet of ¾" plywood — a top and bottom joined to a pair of sides and a divider. The two backs and all the shelves are cut from a sheet of ½" plywood.

You can see the joinery used for assembling the case in the inset drawing above. Rabbets and dadoes are all you need to worry about. And since all the dadoes line up across from each other, be sure to cut matching pairs at the same time. Finally, to make it easy to adjust the position of the shelves as your needs change, make the dadoes for the shelves a little oversized to create a "loose" fit.

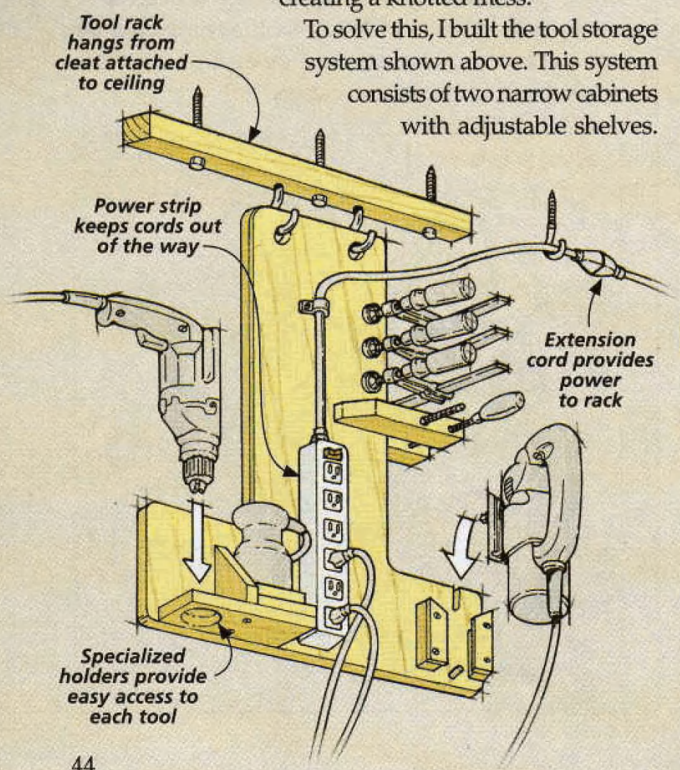

2 Over-the-Bench Tool Rack

My workbench sits in the middle of my shop — nowhere near an outlet to plug in a power tool. And cords running across the floor can be a safety hazard.

To solve this problem, I built the tool rack you see at left. It's just a piece of ¾" plywood that's cut to shape and has a power strip screwed in the middle of it. Specialized holders allow easy access to often-used power tools: a palm sander, a drill, and a jig saw.

To hang the rack from the ceiling, there are a pair of holes that slip over a couple of bicycle hooks screwed into a cleat. This makes it easy to remove the rack if you need it out of the way. Once the rack is complete, all that's left to do is run an extension cord across the ceiling and plug in the power strip.

3 Cordless Tool Storage Cabinet

Cordless tools eliminate the hassle of dealing with power cords as you work. But they do have their own problems — what to do with the extra batteries and the chargers that go with them.

The solution is the hanging cabinet you see at right. It gets the chargers and extra batteries off the top of your bench. A wide shallow drawer in the middle provides storage for saw blades, drill bits, and other accessories. And cutouts in a half-shelf provide quick and easy access to your cordless drills.

The case is made from ½" plywood. The shelves and bottom fit into dadoes in the sides. But what's important to note is that the groove cut into the sides for the back is set in a couple inches. This creates clearance for slipping the charger cords out the back, keeping them out of the way (main drawing and inset).

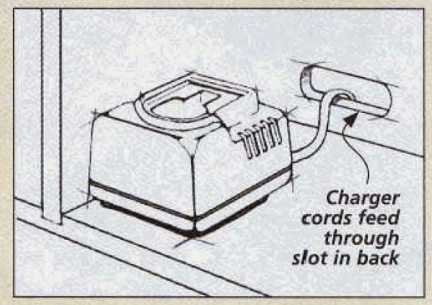

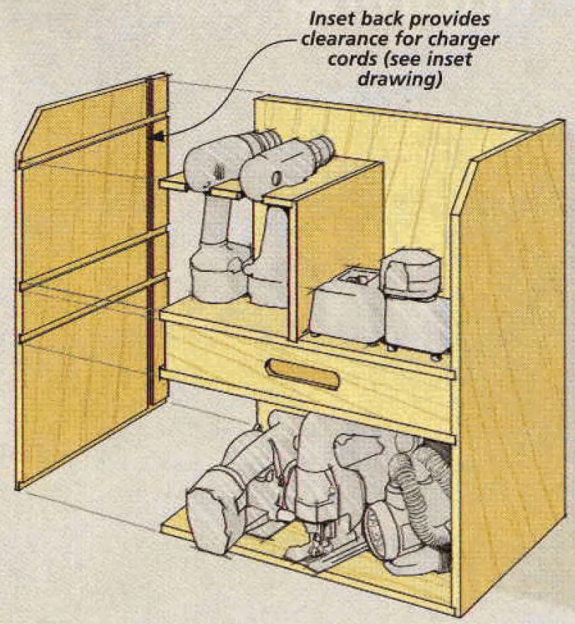

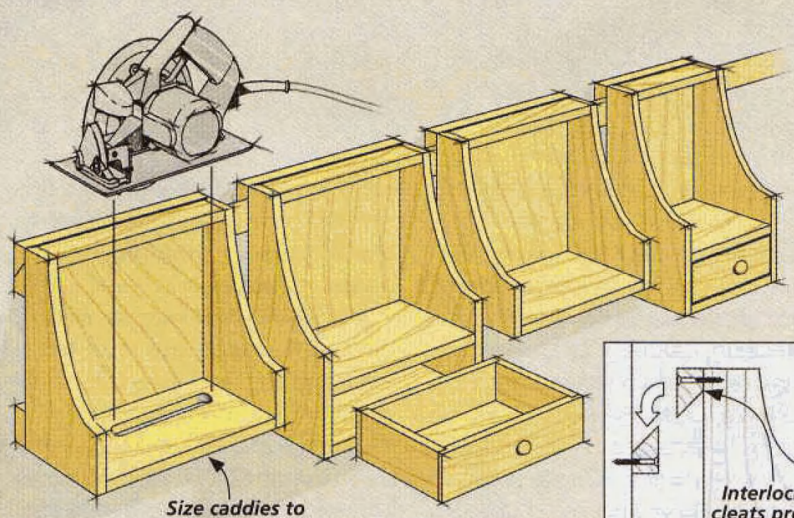

4 Custom Caddies

It's always nice to have your power tools right where you can grab them easily and put them to use — not hidden away in a box or cabinet. A handy solution is the individual hanging caddies illustrated in the drawing at left.

Each caddy is just a pair of shaped sides connected by a top, bottom, and back. To provide storage for any accessories, simply add shelves or drawers. And for easy access, the caddies hang on a beveled cleat system (inset drawing). This makes it easy to rearrange or add power tools as your collection grows.

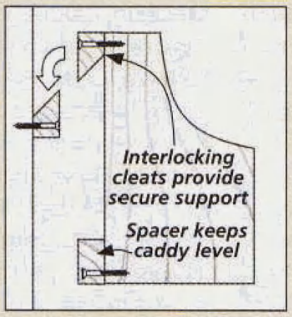

5 Power Tool Shelf

The shelf at right does more than just provide storage for all my portable power tools. It also keeps all the power cords from tangling up like spaghetti.

Each power cord fits into a separate compartment directly below the tool. These compartments are formed by a number of dividers that are sandwiched between a top and bottom made from ¾" plywood.

The location of the dividers is determined by the amount of space each tool requires. And to allow the tool to rest securely on the shelf, it's best to customize the top by cutting slots or drilling holes like you see illustrated at right. W

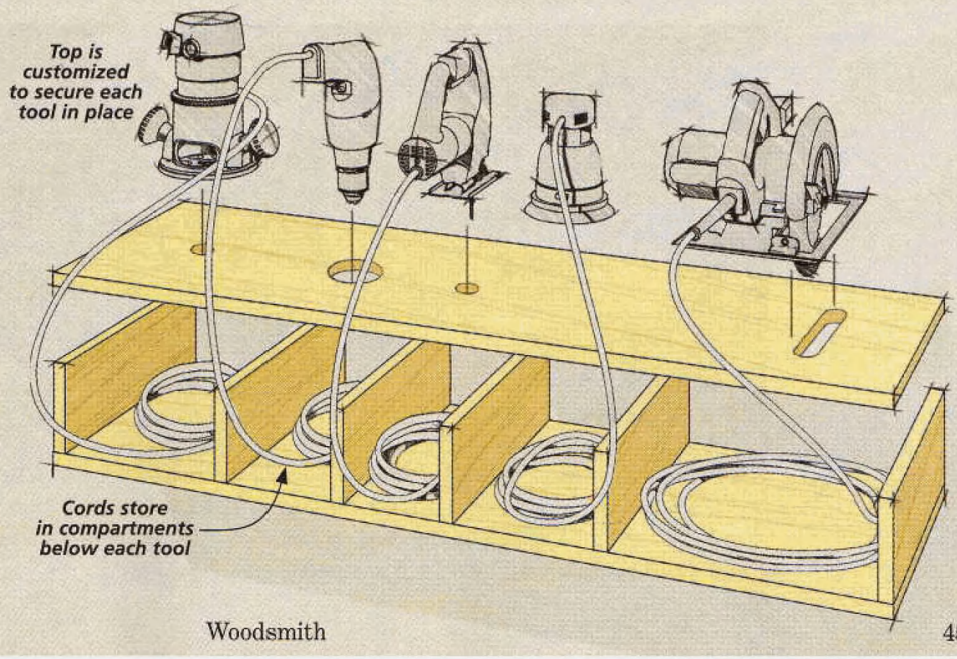

bleaching Wood

You're probably familiar with lots of ways to add color to wood. Here are a few easy ways to make unwanted color go away.

Bleaching wood? The thought might strike you as odd. Why would you ever want to bleach wood? Well, the fact is that there are several bleaching techniques that can bail you out of some troublesome situations and make a project turn out a lot nicer.

THE BENEFITS. First, let me give you some examples of why bleaching wood can be a useful technique, then I'll talk about the "how."

We've all had the experience of a stain or dye job that turned out poorly. Maybe the color was wrong, or it looked blotchy or streaky. Well fortunately, there are ways to make the color you applied go away and give you a second chance.

And how about those ugly, blue-black stains left by the iron pipe clamps you used for a glueup? A bleaching technique can make them disappear right before your eyes.

But what about actually removing the natural color of the wood? It's possible and offers some nice benefits. For example, you can even out the color difference between heartwood and sapwood. Then use a stain to take you back to a natural color. Or you can make two types of wood used in a project match closer in color before applying a finish. Another possibility is to simply lighten the color of the wood to give it a unique appearance.

THE OPTIONS. Basically, there are three different chemical options for bleaching wood — chlorine bleach, oxalic acid, and two-part wood bleach. Each one works a little differently. The trick is to know how each type can benefit you and how to use it effectively.

SAFETY NOTE. But before talking about how to use the different types of bleach, I should mention safety. All the bleaching processes I'll talk about are completely safe as long as you take the right precautions. A pair of heavy rubber gloves, safety glasses or goggles, and a shop apron are a must. The second rule is to use common sense and follow all the instructions.

CHLORINE BLEACH. Common household chlorine bleach can be an easy-to-use and effective "color remover." Chlorine bleach won't lighten the color of wood but it will remove the color you apply to wood — specifically aniline dye, as you can see at left. If the color of the dye isn't what you expected or it looks streaky, the chlorine bleach will neutralize the color.

▲ Chlorine bleach can make an aniline dye disappear almost instantaneously without affecting the natural color of the wood. One or two applications followed by a rinse with water is all it takes.

There's really no trick to it. You simply wipe it on, let the surface dry, and then rinse it with water. But chlorine bleach only works on aniline dye, it won't bleach out pigment stains or other discolorations.

OXALIC ACID VS. IRON STAINS. As I mentioned earlier, another bleaching trick involves oxalic acid. Unfortunately, most woodworkers are familiar with iron stains. The iron from a clamp, a nail, or a piece of hardware (even steel wool) reacts with moisture and tannins in the wood to create a dark, blue-black stain on the surface of the wood. Oak and mahogany are two woods with a high tannin content and a bad reputation for this problem.

An easy and sure-fire fix for an iron stain is to apply a solution of oxalic acid, as shown in the box below. You'll be surprised to see the iron stain "dissolve" like magic.

Oxalic acid is sold in paint, hardware, and home improvement stores and is often labeled as wood bleach. But it won't change the natural color of the wood — it will only bleach out the unwanted iron stains.

TWO-PART WOOD BLEACH. When you want to remove the natural color of wood, check your local paint or hardware store for a two-part (also called A/B) wood bleach. As you can see in the main photo at left, it's very effective. It also works on pigment stains and aniline dyes.

HOW-TO. The technique here is a little more involved but it's still pretty simple (see photos at right). All you have to do is apply part A to the wood, and then while it's still wet, you apply Part B. (You can also mix the two parts together for a one-step application, but once mixed, you'll have to use it all.) Be sure to use a separate foam brush or sponge to apply each solution.

Part A is a strong solution of sodium hydroxide (lye). Part B is an "industrial strength" solution of hydrogen peroxide. When combined, they create a very powerful oxidizing agent that removes the natural color of the wood.

When you apply part A, you may notice that the wood actually darkens slightly. But this is normal. Once part B goes on, the bleaching action you're after will be apparent. You'll see bubbling on the surface that indicates the chemicals are reacting and doing their job.

The bleaching of the wood is gradual and can be masked by the wet surface. So you need to let the wood dry to get the full effect. A second application will remove even more of the color.

The final step is to neutralize any chemical residue left on the wood with a wash coat of white vinegar (a mild acid). And you'll find that a side effect of the process is raised grain. So once the job is complete, a little light sanding is necessary.

Bleaching wood probably isn't something you'll do often. But it's a great way to solve an occasional problem and give you a "clean slate" on which to work. W

Using Two-Part Bleach

▲ From a labeled glass jar, brush a uniform coat of part A onto the surface of the wood.

▲ While the surface is still wet, use a separate brush to apply a thorough coat of part B.

▲ After allowing the wood to dry completely, wipe the surface down with white vinegar.

How-To: Remove Iron Stains

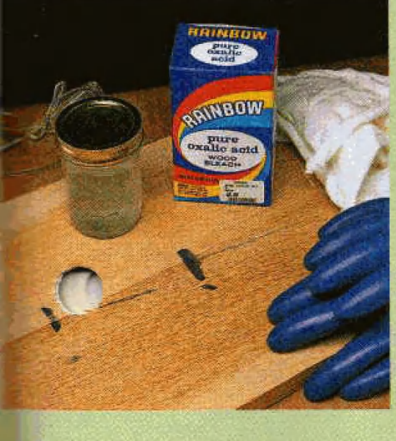

If you've ever had to tediously sand or plane away iron "glueup" stains like those shown in the photo at left, you'll think this simple bleaching technique is the greatest thing since sliced bread. A solution of oxalic acid will do the work quickly and thoroughly and with very little effort.

The process is straightforward. First, you dissolve the oxalic acid crystals in hot water as directed on the package. Next, you dip a clean rag into the solution and give the affected area a good soaking (top right photo).

You'll notice the iron stain beginning to lighten immediately. But depending on the type of wood and the depth of the stain, the full affect may take several applications and a little patience. Finally, when the wood is dry, brush away any residue and wash the area throroughly with clean water.

Questions & Answers

Removing Machining Marks

Q ***As I was applying stain to my finished project, I noticed some "ripples" in the wood. I thought I had done a thorough job of sanding. What causes these ripples and how do I get rid of them?***

Maxine Davies
Norton, Ohio

A When you buy surfaced lumber from a home center or your local lumberyard, it's already been planed to thickness. And possibly even jointed on one or both edges.

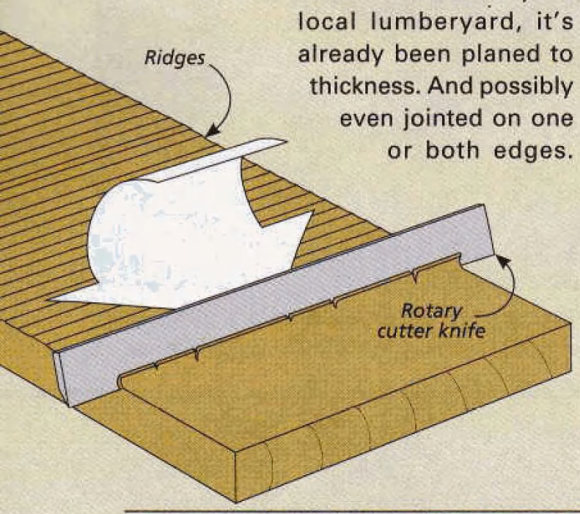

But this is no guarantee that the surface is flat and ready for a finish.

Planers and jointers use rotary cutters like you see in the drawing at left. This rotary cutting action can leave ridges, or bumps, on the surface of the workpiece.

REVEALING RIDGES. The problem is you often don't see these ripples until the stain or the finish is applied. So how do you avoid this problem? There are a few things you can do to ensure the surface is prepared for stain or paint.

The first thing I do is try to sort out the workpieces that have these ridges and require a little extra attention. I do this before assembling the project. Sometimes, wiping the workpiece with mineral spirits will help you see any ripples or rough areas that need some work. A bright, raking light held at a sharp angle can also help (photo below). Then I'll mark these areas with a pencil.

SMOOTHING. Next, I'll work on smoothing the surface in one of three ways: by sanding, using a hand scraper, or leveling the ridges out with a smoothing plane.

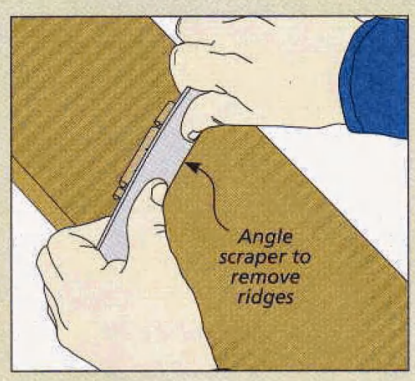

When sanding, I start with a coarse grit and sand until the ripples are gone. Then you can continue using finer grits to eliminate the scratches left by the previous grit. I find it best to use a sanding block to help keep the surface flat and to keep from rounding the edges of the workpiece.

Another option is to use a hand scraper. I'll hold it at an angle so the scraper won't follow the ridges and valleys, as you can see in the illustration above.

A smoothing plane can come in handy, too. I set it to take a very thin shaving. A hand plane works great because the sole of the plane will ride over the ridges as the iron shaves them down. You're left with a glass-smooth surface.

Whatever method you use, it's good to check your progress periodically. When all the ridges and valleys are gone, then you know the surface is ready for a finish. W

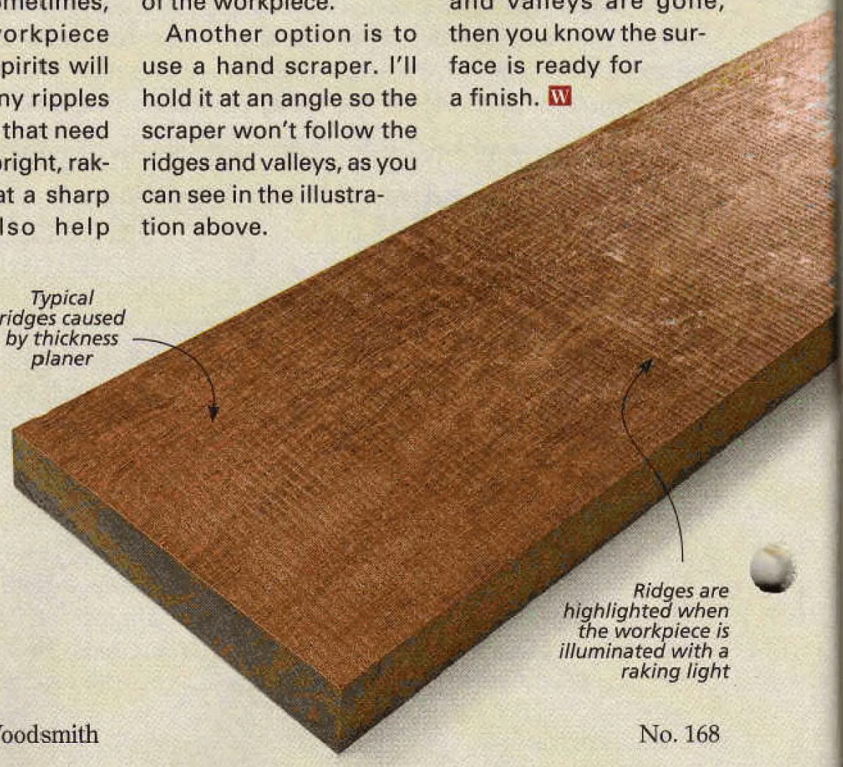

Do you have any questions for us?

If you have a question related to woodworking techniques, tools, finishing, hardware, or accessories, we'd like to hear from you.

Just write down your question and mail it to us: Woodsmith, Q&A, 2200 Grand Avenue, Des Moines, Iowa 50312. Or you can email us the question at: woodsmith@woodsmith.com.

Please include your full name, address, and daytime telephone number in case we have questions.

Sources

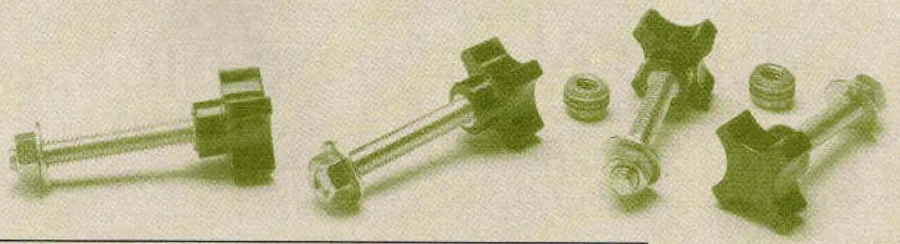

EYE PROTECTION

It pays to get in the habit of wearing safety glasses (page 10) in the shop. You can order glasses and face shields from the suppliers listed in the margin at right.

MITER GAUGE

Setting the angle of your miter gauge usually involves a lot of trial and error. But the *ProMiter-100* miter gauge shown on page 14 eliminates the guesswork. It's available directly from the manufacturer, *Salazar Solutions.*

For setting the blade angle just right for a bevel cut, you might want to consider the *Wixey Digital Angle Gauge* (page 15). You can order it directly from *Wixey* or from *Rockler* or *Woodcraft.*

DESKTOP MESSAGE CENTER

Just a few pieces of hardware is all it takes to complete the message center on page 16. The brass hinges can be ordered from *Lee Valley* (01D30.20).

The pop-up note dispenser is really handy. It's the spring that makes it work. I picked one up from my local hardware store. It's a ¾"-long (free length) closed-end compression spring, 0.48" in diameter. The most important dimension for the spring is its free length (not compressed).

CURVED LEG TABLE

Adding an epoxy inlay is an easy way to turn an ordinary project into a "fine furniture" showpiece. The epoxy I used for the table on page 24 is slow-set epoxy (No. 5174) from *Stewart-MacDonald.* You can also order rosewood (No. 1858) and ebony (No. 1856) inlay filler from them to add color to your epoxy inlay.

Another good source for epoxy inlay materials is *Lee Valley.* They carry the epoxy (56Z71.03) and the aniline dye powder used to color it (56Z08.10 for six colors). The dye is also available in individual color packets.

One more thing — it's nice to have syringes on hand for dispensing the epoxy. You can find them at *Rockler* and *Lee Valley.*

TOOL CHEST

A project like the tool chest on page 32 deserves a highly figured wood. The birdseye and curly maple I used came from *MapleLeaf Hardwoods.* The classic bead molding detail can be made with a 3/32" full-radius, bullnose router bit from *Lee Valley* (16J48.03). To make the decorative edge profile on the top and bottom, I used *Amana Tool's* ogee fillet bit (54112) from the *Woodsmith Store.*

The hardware really gives the tool chest a classic look. The handles (chest lifts) can be ordered from *Horton Brasses* (CL-561). They also carry the knobs with backplates (H-121K), the ⅝"-dia. knobs with wood screws (H-42), and the 1½" x 2" ball-tipped butt hinges (PB-407B).

The ¼"-dia. rare-earth magnets for the doors came from *Lee Valley* (99K31.01). And they also have the matching ¼"-dia. magnet cups (99K32.51) and ⅜"-dia. washers (99K32.62).

Finally, to line the drawers, I used deerskin leather from *Tandy Leather Factory.*

WOOD BLEACHING

You can get a unique look for your project by bleaching the wood as shown on page 46. You can pick up oxalic acid and the two-part wood bleach wherever paint supplies are sold and from the sources listed in the margin. W

Online Customer Service

Click on Subscriber Services at
www.woodsmith.com

- Access your account status
- Change your mailing or email address
- Pay your bill
- Renew your subscription
- Tell us if you've missed an issue
- Find out if your payment has been received

MAIL ORDER SOURCES

Project supplies may be ordered from the following companies:

Woodsmith Store
800-444-7527
woodsmithstore.com
Amana Router Bits, Safety Glasses, Oxalic Acid

Rockler
800-279-4441
rockler.com
Safety Glasses, Hinges, Syringes, Wixey Angle Gauge, Wood Bleach

Lee Valley
800-871-8158
leevalley.com
Aniline Dye, Bullnose Router Bit, Epoxy Inlay, Hinges, Rare-Earth Magnets, Syringes

McMaster-Carr
630-600-3600
mcmaster.com
Safety Glasses

Horton Brasses Inc.
800-754-9127
horton-brasses.com
Chest Lifts, Hinges, Knobs, Pulls

MapleLeaf Hardwoods
570-584-5072
curlymaple.com
Figured Hardwoods

Safety Glasses, Inc.
888-278-0360
safetyglassesinc.com
Safety Glasses

Salazar Solutions, Inc.
719-337-8112
salazarsolutions.com
ProMiter-100

Stewart-MacDonald
800-848-2273
stewmac.com
Epoxy Inlay

Tandy Leather Factory
800-433-3201
tandyleather.com
Deerskin Leather

Wixey
wixey.com
Wixey Angle Gauge

Woodcraft
800-225-1153
woodcraft.com
Safety Glasses, Wixey Angle Gauge

Woodsmith
HARDBOUND VOLUMES

This set includes five hardbound volumes of ***Woodsmith*** *(Volumes 22 through 26).*
Each volume includes a year of issues, plus a table of contents, and a handy index.
Buy them for $29.95 each. Or get the whole five-volume set for $119.75 and ***SAVE $30***
— that's like getting one volume FREE. *(Offer expires 12/31/06)*

Go to www.Woodsmith.com
or Call 1-800-444-7527 Today to Order Yours!

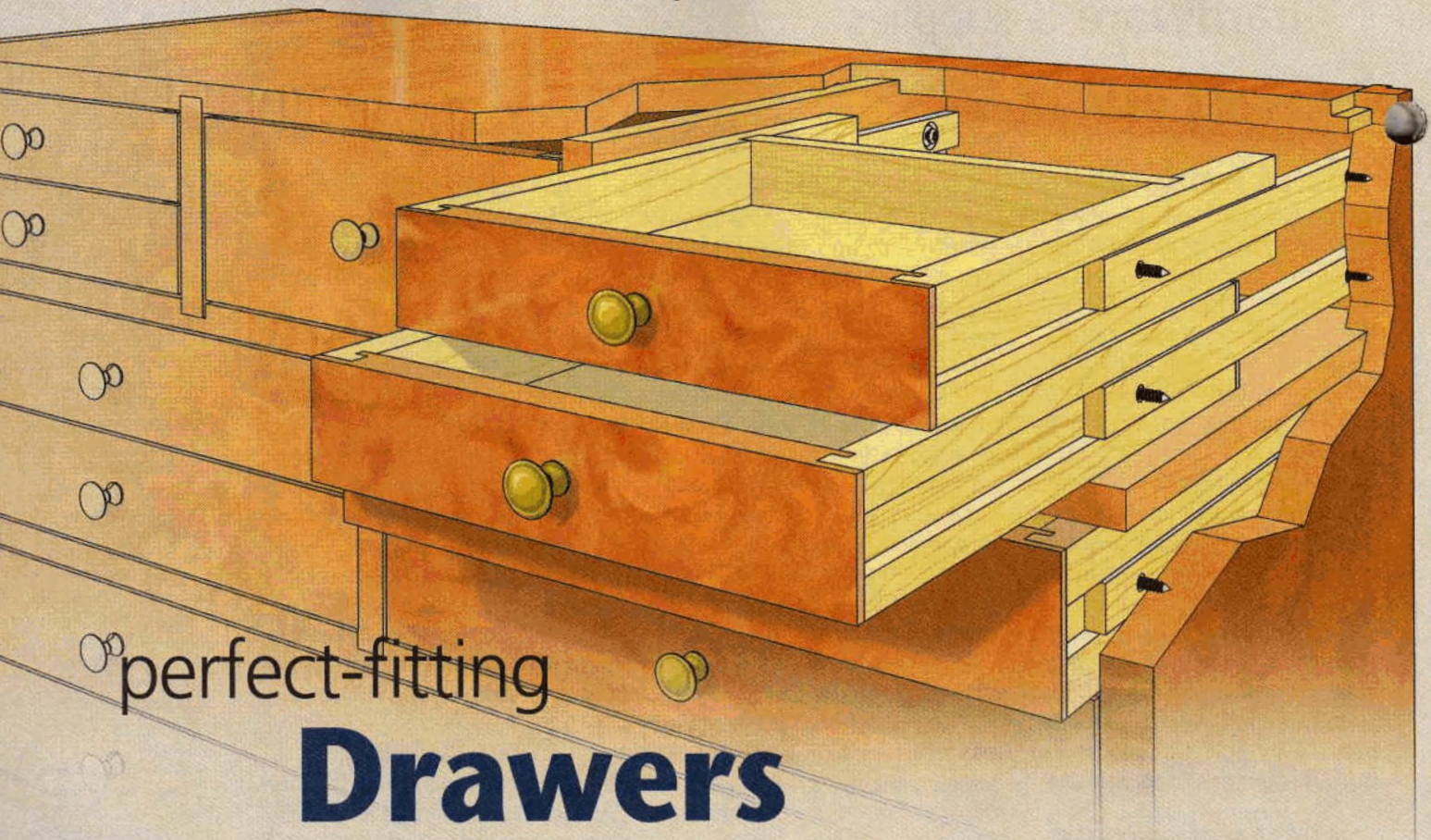

perfect-fitting Drawers

Here's a straightforward method to get smooth-sliding drawers and consistent, narrow gaps.

There's nothing like the feel of a well-fit drawer as you slide it out of its case. The trouble is, there's more to it than simply building the drawers and popping them into place. What it takes is having a solid game plan and then using a little finesse. The payoff is a big improvement in how your projects look and operate.

I have two goals when I'm building drawers — they should operate smoothly without a lot of play (definitely no binding). And second, they should look good. By that I mean the drawers fit their openings well and have narrow, consistent gaps.

SIDE-MOUNTED RUNNERS. The first thing to consider when building drawers is how they are installed. For small drawers, I like to use side-mounted, hardwood runners.

You can see how these work in the drawing above. A groove cut in each drawer side fits over a runner that's attached to the case.

DRAWER DETAILS. Before we start talking about how to use the runners to fit the drawers, I'd like to mention a couple of things about the drawers. The first thing has to do with the grooves that are cut in the drawer sides. I like to center the grooves on the width of the side pieces, as shown in the first drawing at left. Besides being a quick way to cut the grooves, I don't have to keep track of which edge of the workpiece runs along the fence.

The other thing to mention about the drawers is the assembly. You'll find that it's much easier to get each drawer to operate smoothly and look its best when it's glued up square and flat.

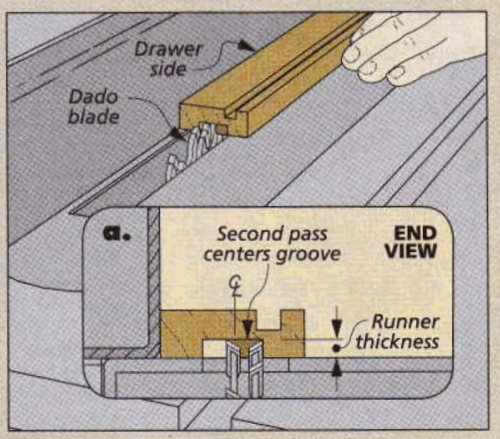

Centered Groove. *After making one pass, flip the side end for end to center the groove. This will make fitting the drawers easier.*

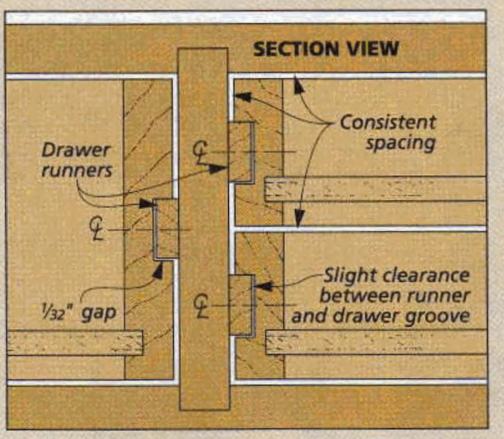

Consistent Gaps. *The goal in fitting the drawers is narrow, even gaps on all sides and drawers that slide smoothly on the runners.*

FITTING THE DRAWERS

With the drawers ready, you can begin the process of fitting them to the case. If possible, leave the back of the case off. This gives you easy access and greater visibility for adjusting the runners.

Since the fit of one drawer affects the others, I like to work from top to bottom. This helps me to stay organized and gauge my progress.

There's one last thing I'd like to mention. I number all the drawers. You'll be customizing each opening for a particular drawer. And you don't want to get things mixed up.

SIZE THE RUNNERS. The next step in the process is to make the runners. For the width, I rip them so they're 1/32" narrower than the groove, as illustrated in the right drawing on the bottom of the opposite page. A close fit here keeps the drawer from tipping as it's opened.

As for the thickness, I size the runners to "bottom out" in the groove. This allows me to shave them down to get a wiggle-free drawer.

ATTACHING THE RUNNERS. After cutting the runners to size, I drill the mounting holes. This is another place where you can build in some adjustability. To do this, I drill a counterbored hole that's larger than the shank of the screw. Using an oversize hole lets me tweak the position of the runner up and down and front to back, as shown in the drawing at right.

At this point, you can install the runners — just don't tighten them down. Simply snug them up enough so they hold their position while you adjust them.

TRIM THE RUNNERS. Now you can slip the top drawer in place. Since the runners were cut a little thick, the fit may be pretty tight. (Or it may not go in at all.) You can get the drawer to fit by taking a few swipes with a block plane along the face of each runner. And if the back of the case is open, you can do this with the runners still attached to the case.

Check the fit often during this trimming. You want to make sure the drawer stays centered in its opening. I also like to give the runners a slight taper from front to back (detail 'a'). This allows the drawers to open and close smoothly but limits the side-to-side play at the front. Aim for the smallest gap that lets the drawer move without binding (right drawing on facing page).

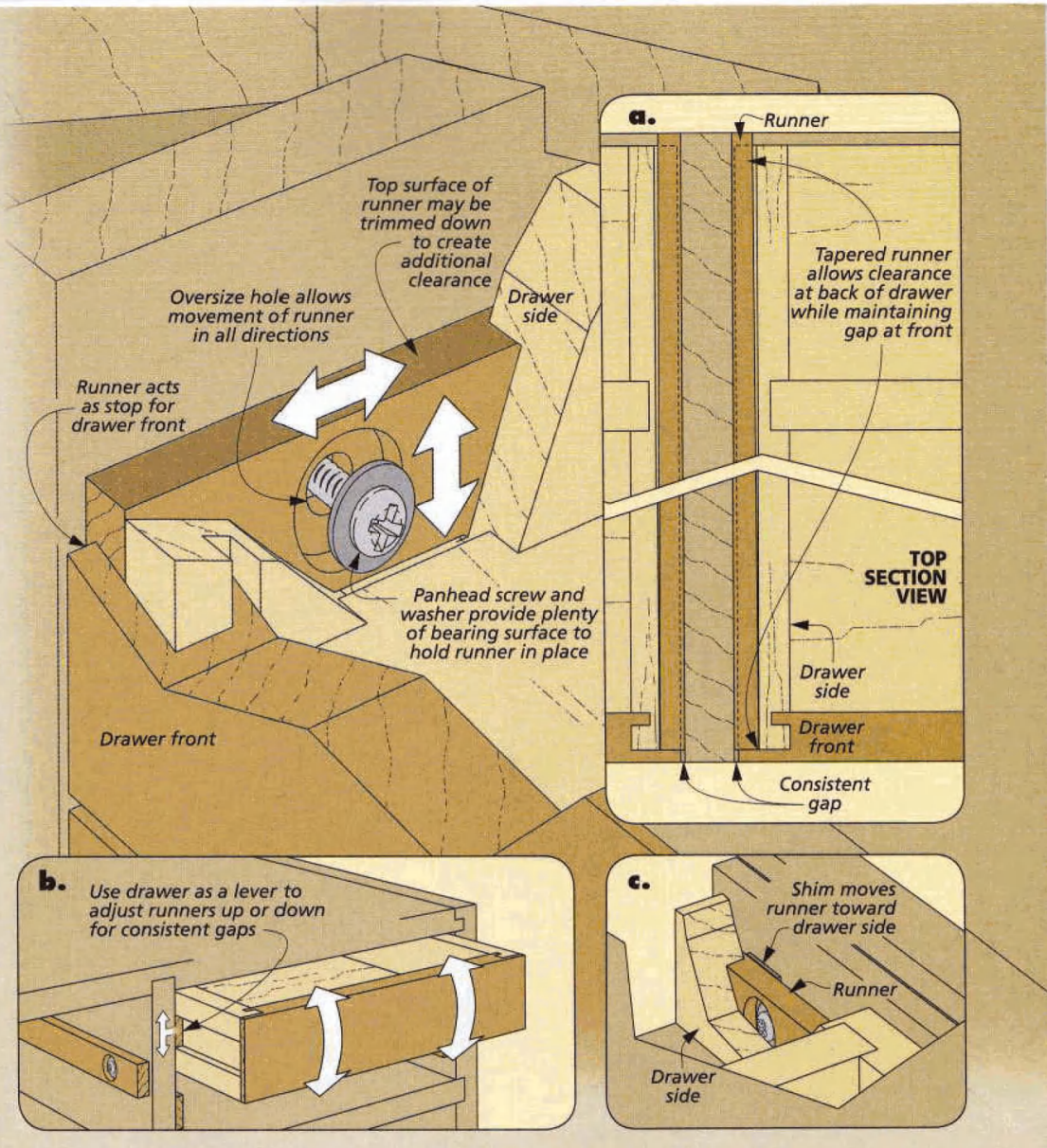

And don't worry if you trim too much off a runner. You can use pieces of veneer or even washers to shim them back out (detail 'c').

CONSISTENT GAPS. As you shave the runners to let the drawer slide in, another thing to watch is the gap along the top of the drawer and the case. What you're looking for here is that the drawer is level from side to side and the gap on top matches the gaps on the sides. You can tap the runners to adjust them or use the drawer as a lever (detail 'b').

DRAWER STOP. The final adjustment to make to the runners is the front-to-back position. In the case of the tool chest on page 32, the leading edge of the runner acts as a drawer stop. And the goal here is to have the drawer fronts flush with the front of the case dividers.

Once you have the top drawer positioned, you can remove the drawer and tighten down the runner screws. Then you can slide the drawer back in place and move on to the next drawer. Now it's just a matter of repeating the fitting process as you work down the case.

FINAL TOUCHES. As you get to the last drawer, it's a good idea to take a step back and look at the big picture. You may find the gap at the bottom doesn't match the others. If this is the case, you'll need to go back to the top and tweak the runners to balance the gaps.

The end result of all this fitting and trimming are drawers that not only look great, but open and close effortlessly for years to come. W

looking inside
Final Details

Curved-Leg Table. Here's a small project that really stands out. But that doesn't mean it's hard to build. We'll show you some straightforward techniques and simple tips for making the curved legs and the round top. Just turn to page 22.

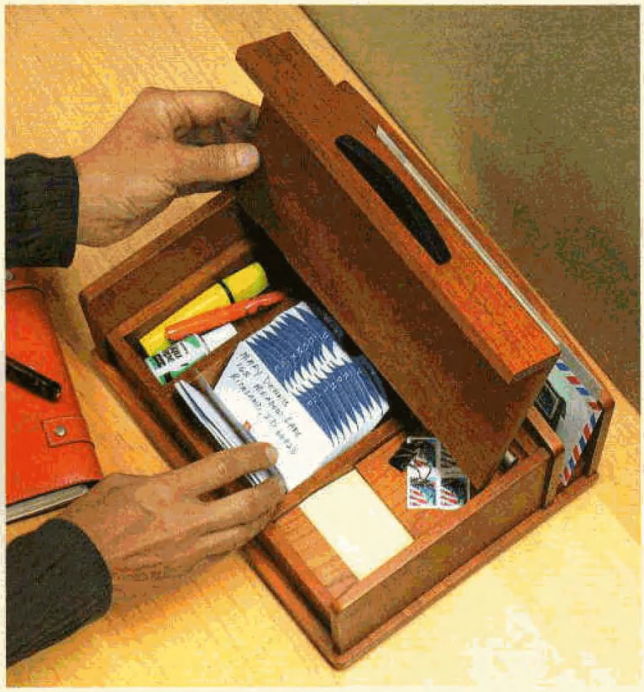

▲ *Mail/Message Center.* Think of it as a desktop office. This easy-to-build organizer holds everything you need to stay in touch without taking up a lot of space. You'll find the complete plans starting on page 16.

▼ *Tool Chest.* Build the perfect home for your treasured possessions from tools to jewelry. You'll be amazed at how much you can fit inside. Detailed instructions begin on page 32.

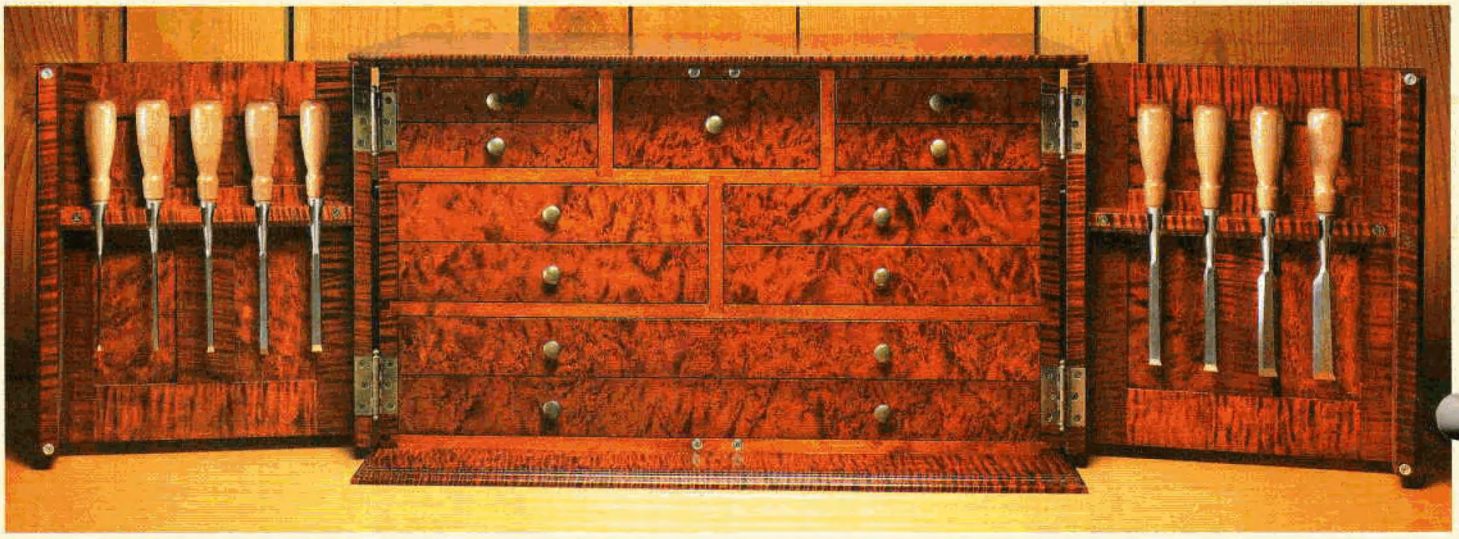

Keep It All Organized!

Don't forget your *Woodsmith* binders for easy storage

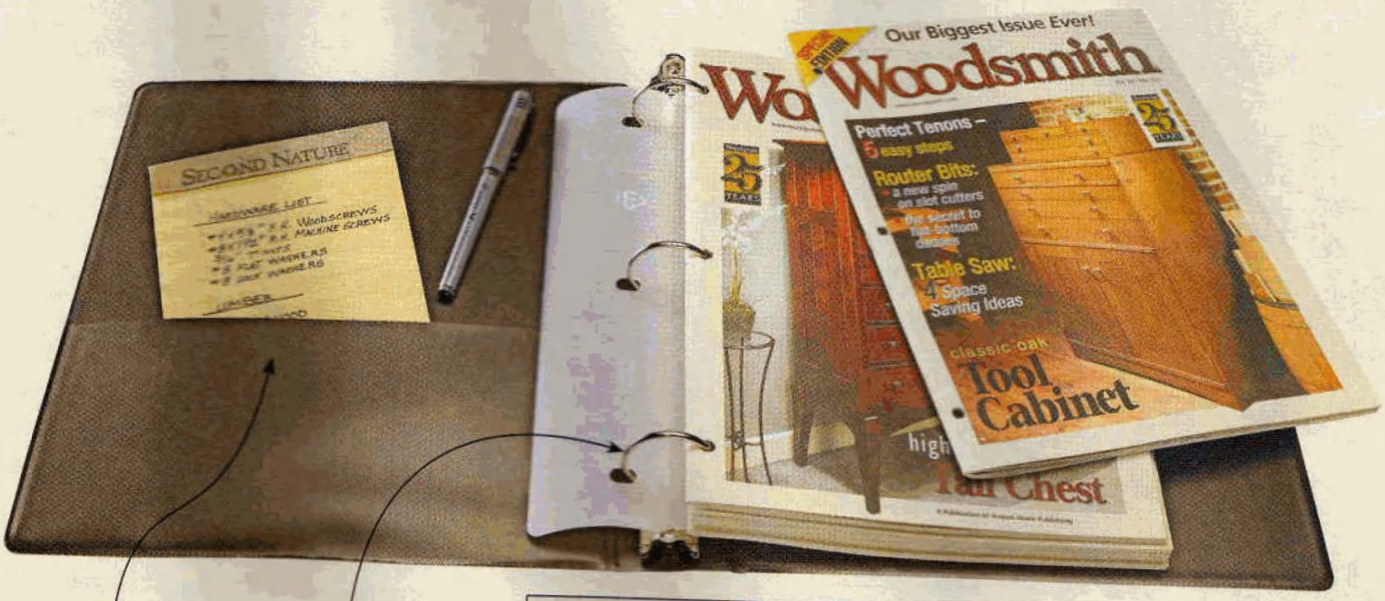

Extra pocket inside for storing notes

Quality snap rings with a quick-open lever

As each issue of *Woodsmith* arrives, here's a convenient way to keep them all organized. Each binder features durable, vinyl covers and easy-to-read perforated number tags. Snap rings with a quick-open lever make it easy to insert and remove issues. And there's an extra pocket inside for storing notes. Each binder holds a full year (6 issues) of the new, expanded (52-page) issues of *Woodsmith*.

***Woodsmith* Binder**

❍ **WB** *(Holds 6 Issues)* **$12.95**

Binders hold six 52-page issues

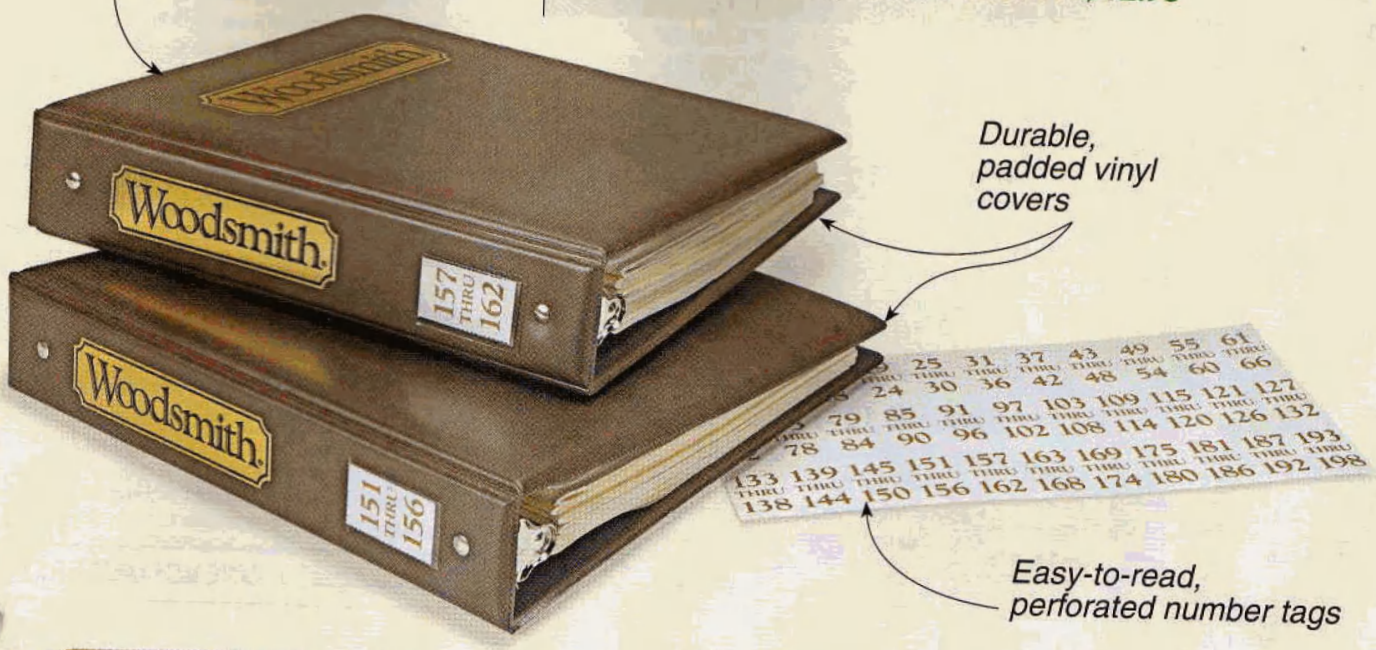

Durable, padded vinyl covers

Easy-to-read, perforated number tags

3 easy ways to order:

1 Web Fastest way to order
www.**Woodsmith**.com

2 Mail
See Front Cover

3 Call Please mention Key Code **WA66** when ordering
1-800-444-7527

Customer Service Representatives are available weekdays 7 AM to 11 PM (CST) and on weekends 8 AM to 6 PM (CST).

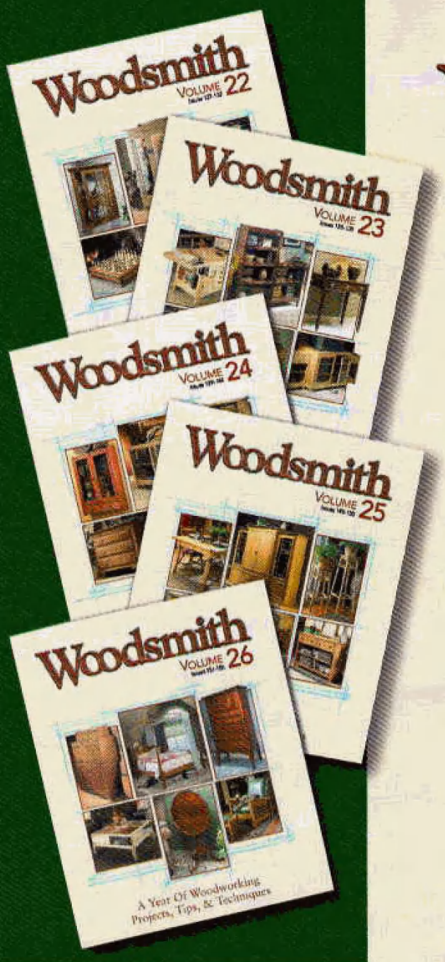

Woodsmith Annual Bound Volumes

VOLUME 22, HARDBOUND EDITION:
(Issues 127–132)

- Craftsman End Table, Kitchen Work Center
- Craftsman Curio Cabinet, Router Table, Chessboard
- Plus, Router Tips, Box Joints, Cutting Tenons, Cutting Coves, Woodworking Clamps, Using Metal Rules

Item #WV22 **$29.95**

VOLUME 23, HARDBOUND EDITION:
(Issues 133–138)

- Heavy-Duty Workbench, Barrister's Bookcase
- Sectional Entertainment Center, Formal Hall Table
- Plus, Fast Fixes, Choosing Glues, Clamping & Assembly, Pocket Hole Joinery, Drill Press Tips, Dado Jig

Item #WV23 **$29.95**

VOLUME 24, HARDBOUND EDITION:
(Issues 139–144)

- Bedside Chest, Sofa Table Bookcase, Convertible Coffee Table
- Patio Table & Benches, Jewelry Chest-on-Chest
- Plus, Dovetailing Tips, Trouble-Free Half Laps, Outdoor Finishes, Mitered Half Laps, Router Set-up Tips

Item #WV24 **$29.95**

VOLUME 25, HARDBOUND EDITION:
(Issues 145–150)

- Arch-Top Headboard, Classic Cherry Console
- Home Entertainment Center, Heirloom Tables
- Plus, Half-Mortise Locks, Dado Blades, Adjustable Mortising Jig, Milk Paint Finish, Frame and Panel Joinery, Locking Rabbets

Item #WV25 **$29.95**

VOLUME 26, HARDBOUND EDITION:
(Issues 151–156)

- Classic Oak Tool Cabinet, Futon, Pencil Post Bed
- Corner Media Cabinet, Morris Chair & Ottoman
- Plus, Flat-Bottomed Dadoes, Perfect Chamfers, 3 Basic Router Bits, Routing Dovetails, Working with Plywood, A Never-Fail Finish

Item #WV26 **$29.95**

5 VOLUME WOODSMITH LIBRARY SET:
(Volumes 22 thru 26)

- Order as a set and receive all 5 bound volumes to make a complete library
- Preferred Customer Discount — **Save $30**

Item #WL156 **$119.75**

That's like getting **ONE VOLUME FREE**

ShopNotes Annual Bound Volumes

VOLUME 9, HARDBOUND EDITION:
(Issues 49–54)

- Table Saw Workstation, Band Saw Upgrade
- Adjustable Miter Jig, Miter Gauge Fence
- Plus, Full-Mortise Locks, Tongue & Groove Joinery, Four "Must-Have" Hammers, Chip Carving

Item #SV09 **$29.95**

VOLUME 10, HARDBOUND EDITION:
(Issues 55–60)

- Circular Saw Miter Station, Pin Router
- Modular Shop Cabinets, Auxiliary Rip Fence
- Plus, Water-Based Finishes, Polyurethane Glue, Two Favorite Pull Saws

Item #SV10 **$29.95**

VOLUME 11, HARDBOUND EDITION:
(Issues 61–66)

- Box Joint Jig, Router Storage System
- Router Mortising Jig, Table Saw Workstation
- Plus, Tapping Threads, Great Glue-Ups, Crosscutting Tips

Item #SV11 **$29.95**

VOLUME 12, HARDBOUND EDITION:
(Issues 67–72)

- Horizontal Mortising Machine, Small Parts Storage
- Stow-Away Router Table, Drill Press Belt Sander
- Plus, Jig Saw Blades, Set-Up Gauge

Item #SV12 **$29.95**

VOLUME 13, HARDBOUND EDITION:
(Issues 73–78)

- Benchtop Mini-Lathe, Plank-Top Workbench
- Sliding-Door Shop Cabinet, 5 Plywood Shop Projects
- Plus, 3-in-1 Cut-Off Sled, Band Saw Tune-Up, Jointer Tune-Up

Item #SV13 **$29.95**

5 VOLUME SHOPNOTES LIBRARY SET:
(Volumes 9 thru 13)

- Order as a set and receive all 5 bound volumes to make a complete library
- Preferred Customer Discount — **Save $30**

Item #SL78 **$119.75**

That's like getting **ONE VOLUME FREE**

3 easy ways to order:

1 Web Fastest way to order
www.**Woodsmith**.com

2 Mail
See Front Cover

3 Call Please mention Key Code **WA66** when ordering
1-800-444-7527

100% Satisfaction Guarantee
If you are not completely satisfied with your purchase, just return it. We will gladly send you a 100% refund. No questions asked.